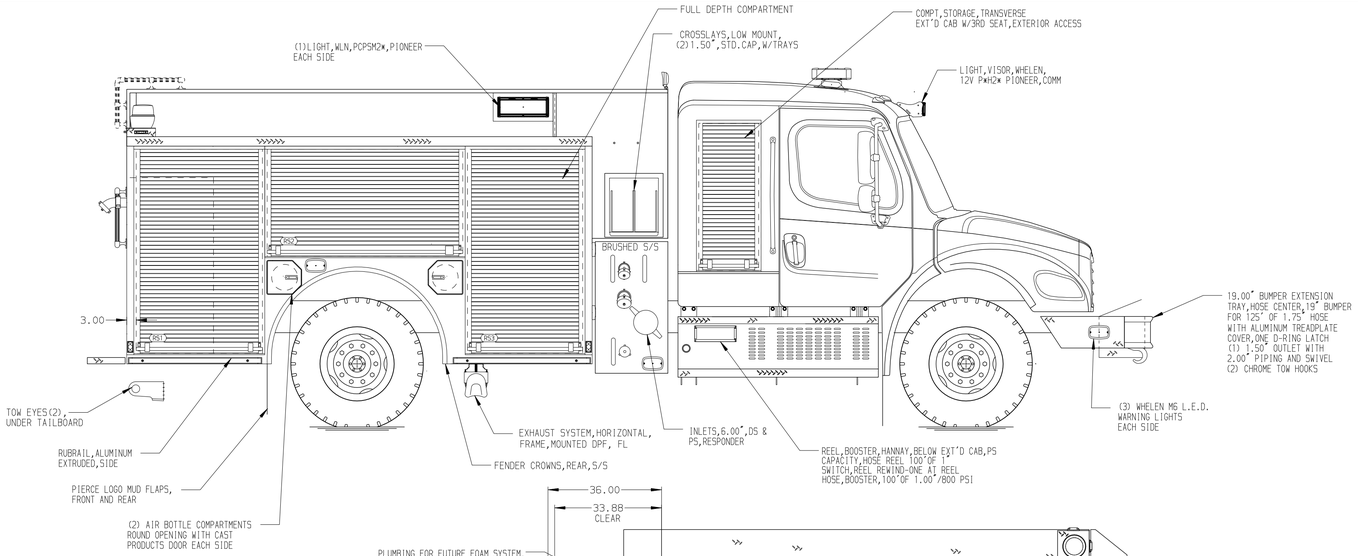

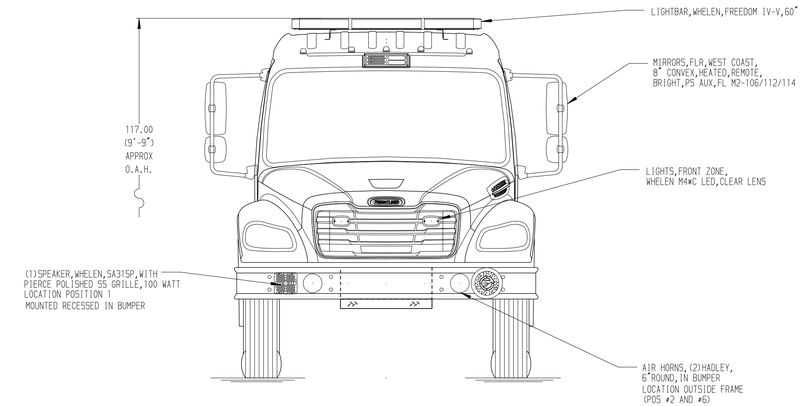

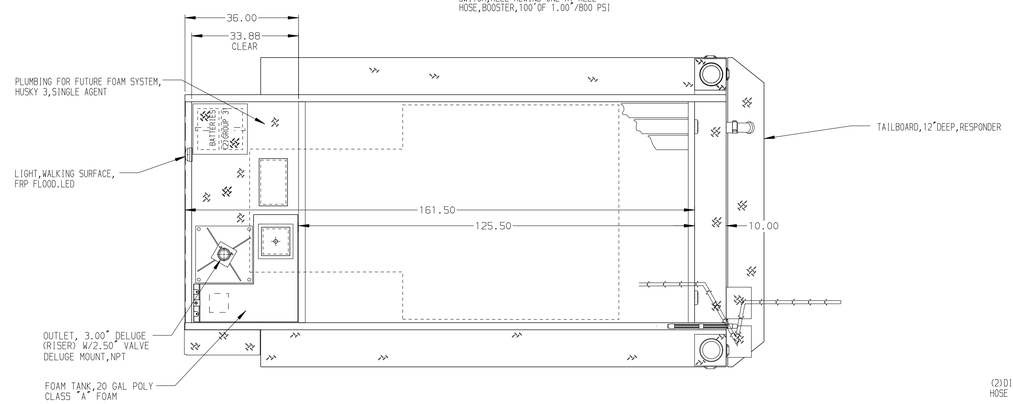

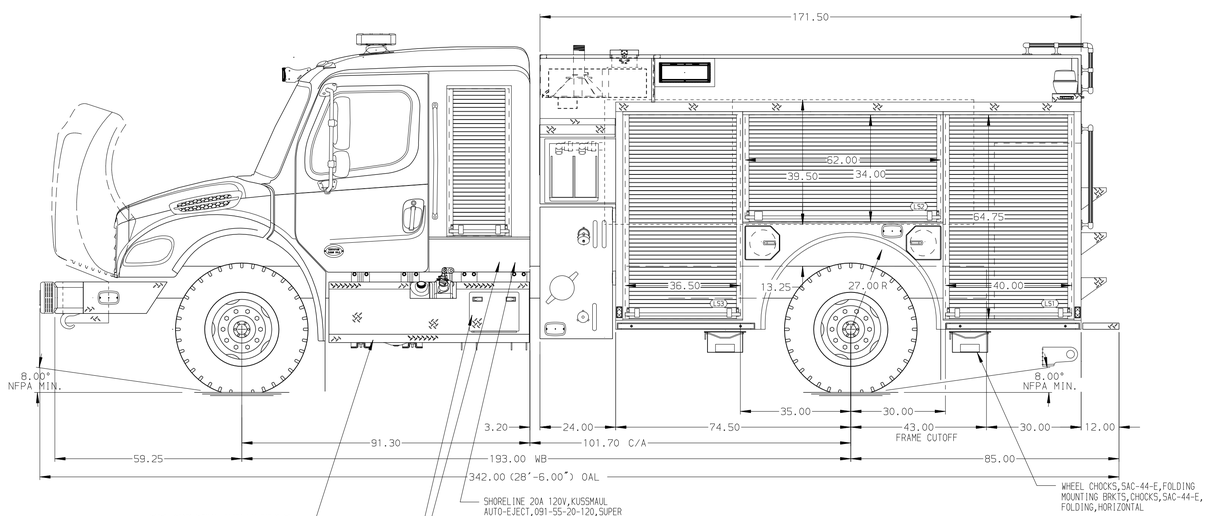

ALUMINUM BODY

HOSEBED CAPACITIES

1. 750' OF 2.50" D.J. POLYESTER HOSE
2. 750' OF 2.50" D.J. POLYESTER HOSE
3. 400' OF 1.50" D.J. RUBBER HOSE

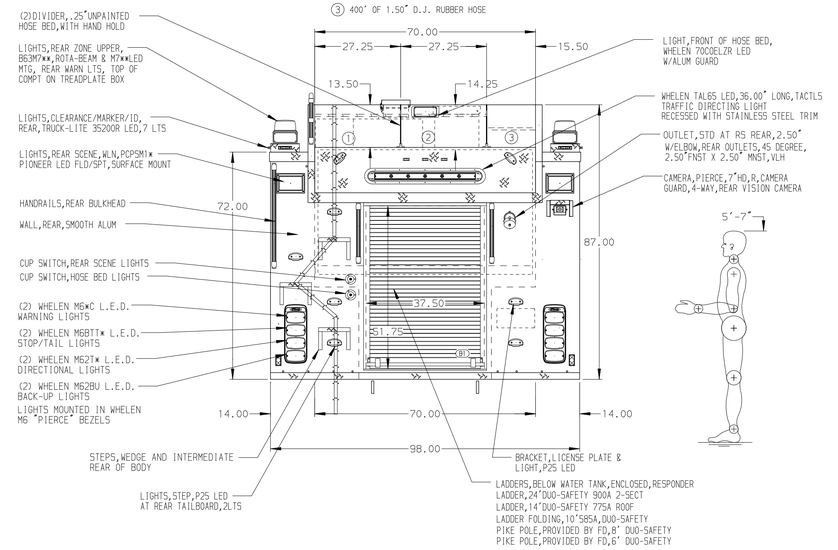

NOTE

DIMENSIONS SHOWN ARE APPROXIMATE AND ARE SUBJECT TO MINOR DEVIATIONS AS MAY OCCUR OR BE NECESSARY IN CONSTRUCTION.
MINOR DETAILS NOT SHOWN.

1000 GAL=1882673
20 GAL FOAM=1918462

REV	DATE	BY	CH
▽	-	-	-

CHASSIS DATA
MAKE: FL
MODEL: M2 106 PLUS

Pierce MANUFACTURING INC.
BRADENTON, FLORIDA

TITLE: 1250-D-1000 POLY 147.5"BODY DS & PS FULL HEIGHT (2)SPEEDLAYS
FOR: SNYDER FIRE DEPARTMENT, SNYDER,TX
DWG NO.: 40107AD

JOB NO.	40107
SCALE	1:24
DATE	
DRAWN BY	RHU
	17JUL24
CHECKED BY	AJA
	17JUL24
SHEET SIZE	D
SHEET NO.	1 OF 1

View File Created 17-JUL-2024 09:48:00