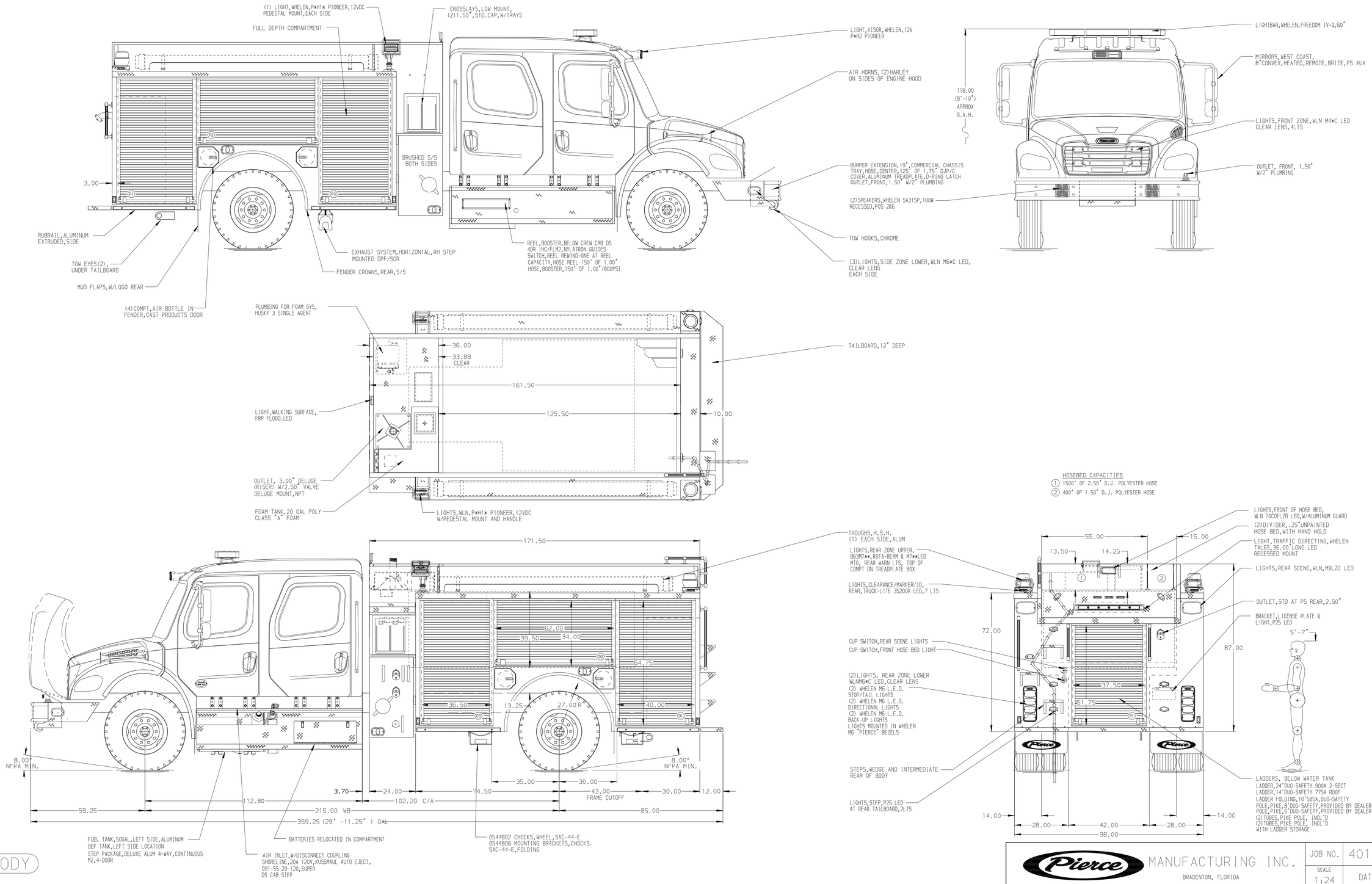

ALUMINUM BODY

NOTE

DIMENSIONS SHOWN ARE APPROXIMATE AND ARE SUBJECT TO MINOR DEVIATIONS AS MAY OCCUR OR BE NECESSARY IN CONSTRUCTION.
MINOR DETAILS NOT SHOWN.

(1000 GAL=1882673)
(20 GAL FOAM=1918462)

REV	DATE	BY	CH
B	11DEC24	VHO	JAP
A	19AUG24	VHO	AJA

CHASSIS DATA: MAKE FL; MODEL M2 106 PLUS

TITLE: 1250GPM, 1000G WATER TANK, 20G FOAM TANK
147.50" BODY PUMPER-RESPONDER,PIECE COMMAND ZONE

FOR: LIMESTONE COUNTY ESD#2 WEST LAKE LIMESTONE VFD
THORNTON, TX

DWG NO.: 40108AD

Pierce MANUFACTURING INC.
BRADENTON, FLORIDA

JOB NO.	40108
SCALE 1:24	DATE
DRAWN BY VHO	-
CHECKED BY RWI	01AUG24
SHEET SIZE D	SHEET NO. 1 OF 1

View File Created 12-DEC-2024 09:51:38