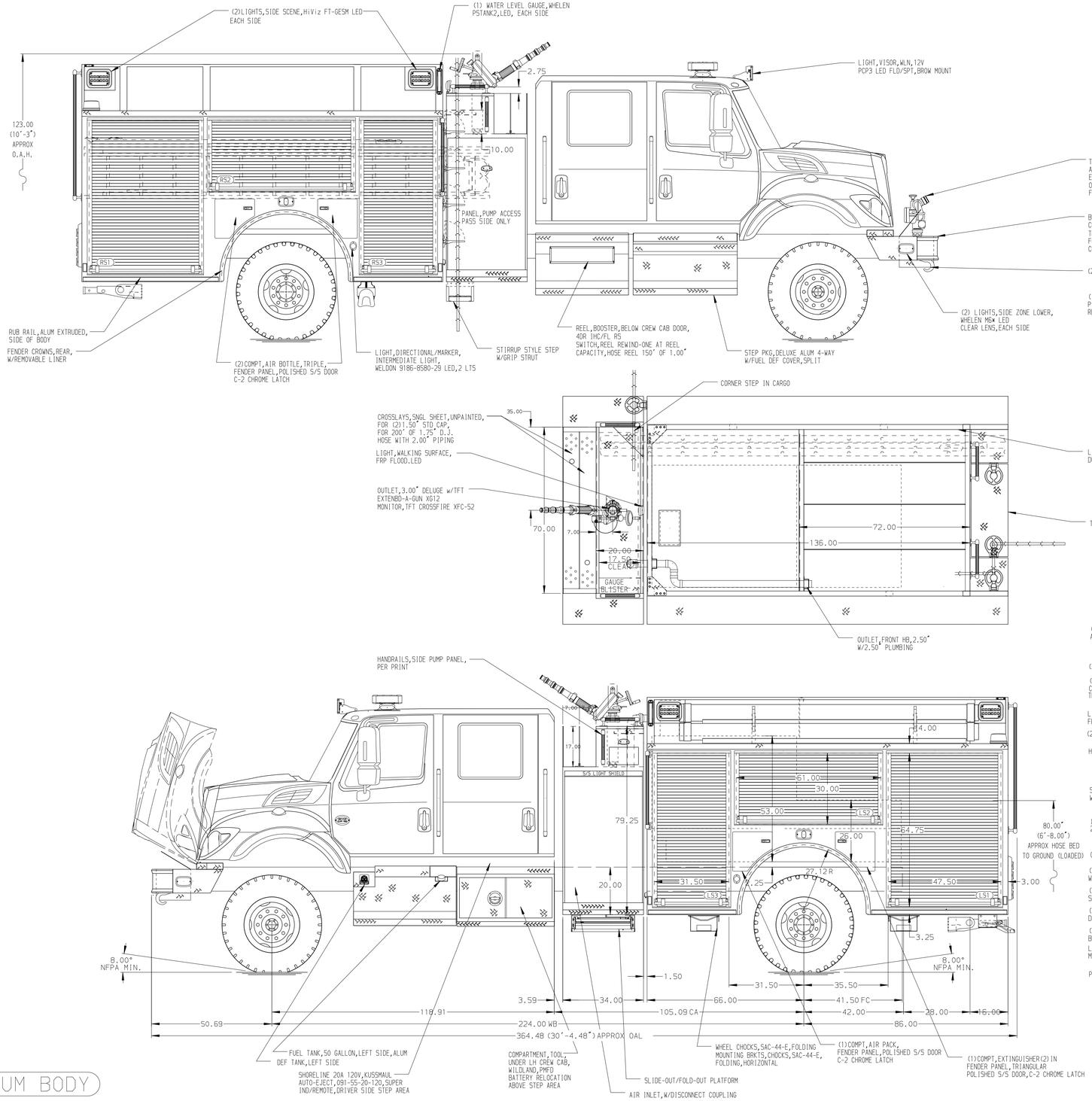

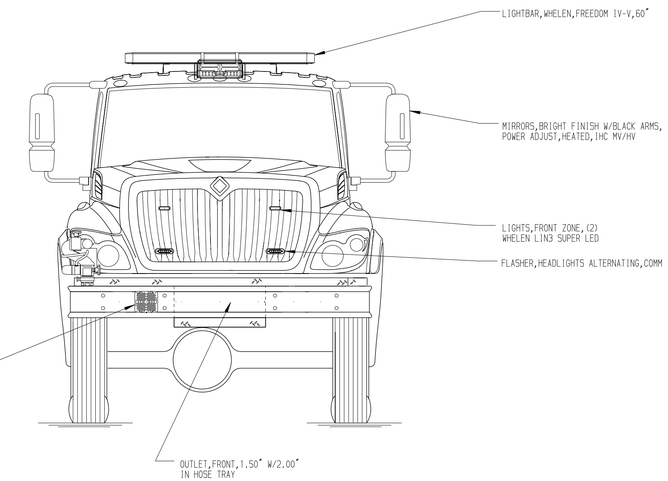

HOSEBED CAPACITY

BED 1
800' OF 3.00" D.J. POLY HOSE

BED 2
500' OF 5.00" D.J. POLY HOSE

BED 3
500' OF 5.00" D.J. POLY HOSE

BED 4
200' OF 3.00" D.J. POLY HOSE

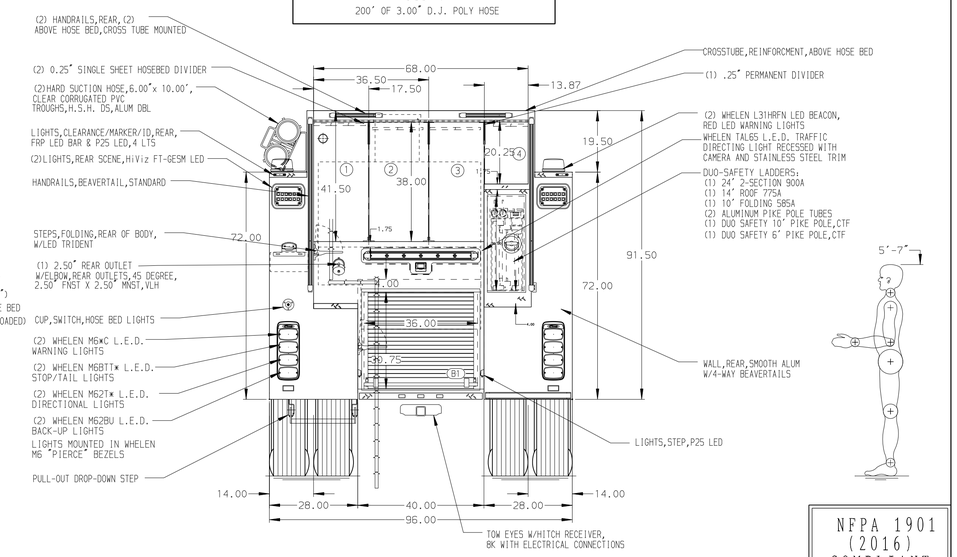

NFPA 1901 (2016) COMPLIANT

ALUMINUM BODY

Pierce MANUFACTURING INC.

JOB NO.	40129
SCALE	1:24
DATE	
TITLE	1250-D-750 POLY,152.00" PUMPER BODY (2)1.5" CROSSLAYS,3" DELUGE
FOR	HARMONY VALLEY SPECIAL SERVICE DIST NEW HARMONY,UT
DRAWN BY	RHU
DATE	18JUL24
CHECKED BY	AJA
DATE	22JUL24
DWG NO.	40129AD
SHEET SIZE	D
SHEET NO.	1 OF 1

REV	DATE	BY	CH
7	08APR25	RHU	CCS
6	05FEB25	RHU	CCS
5	18NOV24	RHU	CCS
4	08NOV24	RHU	CCS
3	02OCT24	RHU	CCS

CHASSIS DATA
MAKE: IHC
MODEL: HV507 4X4

NOTE

DIMENSIONS SHOWN ARE APPROXIMATE AND ARE SUBJECT TO MINOR DEVIATIONS AS MAY OCCUR OR BE NECESSARY IN CONSTRUCTION.
MINOR DETAILS NOT SHOWN.

View File Created 08-APR-2025 13:00:40