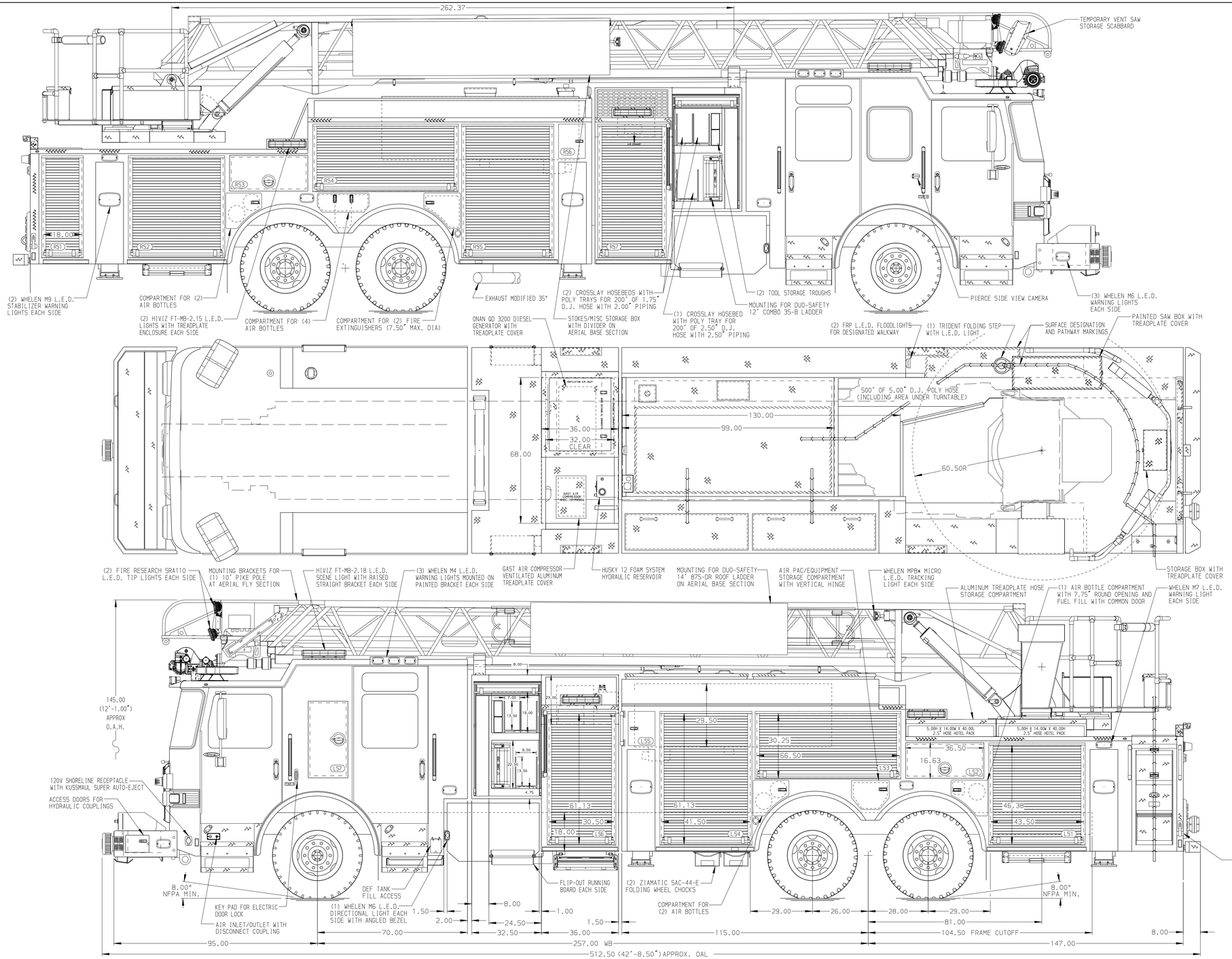

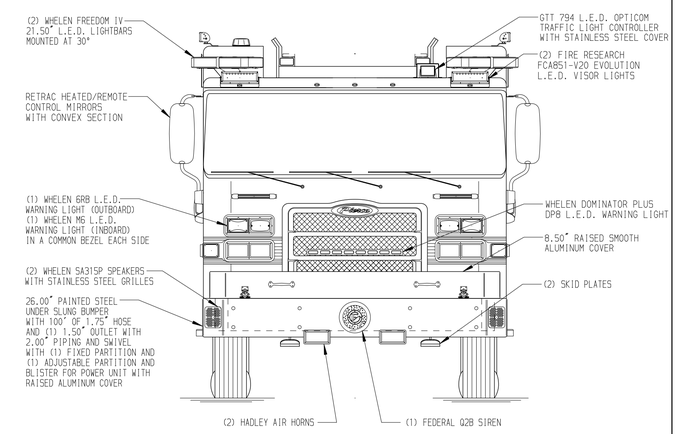

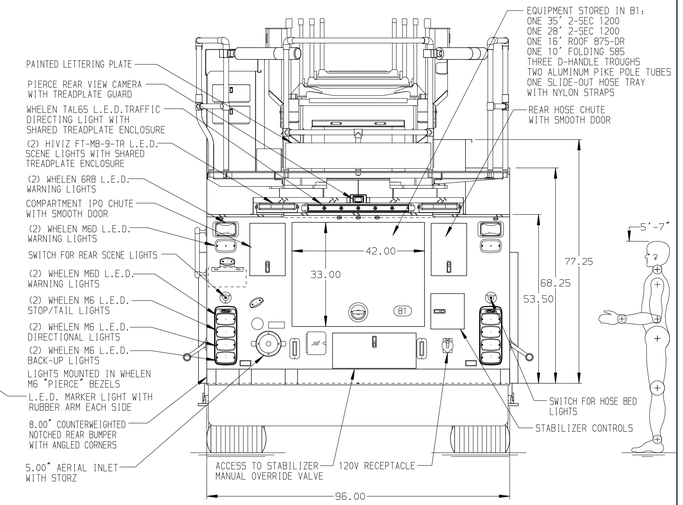

ALUMINUM BODY

SIDE ROLL AND FRONTAL IMPACT PROTECTION

NOTE

DIMENSIONS SHOWN ARE APPROXIMATE AND ARE SUBJECT TO MINOR DEVIATIONS AS MAY OCCUR OR BE NECESSARY IN CONSTRUCTION.
MINOR DETAILS NOT SHOWN.

1. L.E.D. LIGHT STRIPS LOCATED IN THE HOSE BED PER ORDER
2. DRIP PAN GUARD FOR ROLL-UP DOORS PER ORDER
3. FIVE ADJUSTABLE SHELVES IN COMPARTMENTS PER ORDER
4. ONE ALUMINUM SLIDE-OUT TOOLBOARD WITH PEGBOARD PATTERN IN COMPARTMENT PER ORDER
5. ONE FIXED SHELF WITH SPECIAL SIDE HEIGHTS IN COMPARTMENT PER ORDER
6. THREE ADJUSTABLE TILT/SLIDE-OUT TRAYS IN COMPARTMENTS PER ORDER
7. TWO FLOOR MOUNTED SLIDE-OUT TRAYS IN COMPARTMENTS PER ORDER
8. PEGBOARD ON UPPER BACK WALL OF TWO COMPARTMENTS PER ORDER
9. ONE ADJUSTABLE 0.38" FLAT PLATE IN COMPARTMENT PER ORDER
10. ONE OIL DRY HOPPER IN COMPARTMENT PER ORDER
11. ONE CTECH DRAWER ASSEMBLY IN COMPARTMENT PER ORDER
12. ONE VERTICAL PARTITION IN COMPARTMENT PER ORDER
13. TWO ALUMINUM SCUFFPLATES WITH "DA" FINISH ON COMPARTMENT FLOORS PER ORDER
14. BATTERY CHARGE INDICATOR LOCATED NEAR D.S. SEAT RISER WITH BRACKET
15. BATTERY CHARGER LOCATED IN CREW CAB SEAT RISER PER ORDER
16. CIRCUIT BREAKER PANEL LOCATED IN COMPARTMENT ORDER
17. TORQUE BOX MODIFIED FOR SLIDE-OUT TRAY
18. L.E.D. LIGHTING ON AERIAL LADDER SECTIONS
19. DC POWER TO AERIAL TIP
20. 2-WAY INTERCOM SYSTEM BETWEEN AERIAL TIP AND TURNTABLE
21. LIFTING EYE ROPE RESCUE ATTACHMENT AT AERIAL TIP
22. TRIDENT FOLDING STEPS ON AERIAL DEVICE
23. 1500 GPM HIGH FLOW WATERWAY
24. STABILIZERS MODIFIED FOR 18" GROUND PENETRATION
25. NO LIMITED RETRACTION ON AERIAL DEVICE
26. AERIAL PEDESTAL RAISED 3.00"
27. OSHKOSH TAK-4 T3 REAR STEER
28. LYFEPULLEY RESCUE SYSTEM AT AERIAL TIP
29. ROPE TIE BAR FOR RESCUE LIFTING SYSTEM AT AERIAL BASE SECTION
30. (2) PAINTED NUMBER PLATES LOCATED ON AERIAL EGRESS PER ORDER
31. ONE 120V DUPLEX RECEPTACLE IN COMPARTMENT PER ORDER

REV	DATE	BY	CH
V	20AUG25	SHU	DTJ

CHASSIS DATA
MAKE: PIERCE
MODEL: ENFORCER

Pierce MANUFACTURING INC.

TITLE: 107' ASCENDANT AERIAL LADDER & BODY ASSEMBLY
530 GALLON TANK, 500 GAL WATER/30 GAL FOAM
FOR: ROUND ROCK FIRE DEPARTMENT
ROUND ROCK, TX

DWG NO.: 40143AD

JOB NO.	40143
SCALE	1:24
DATE	
DRAWN BY	SHU 22MAY25
CHECKED BY	NAK 28MAY25
SHEET SIZE	D
SHEET NO.	1 OF 1

View File Created 29-AUG-2025 13:52:50