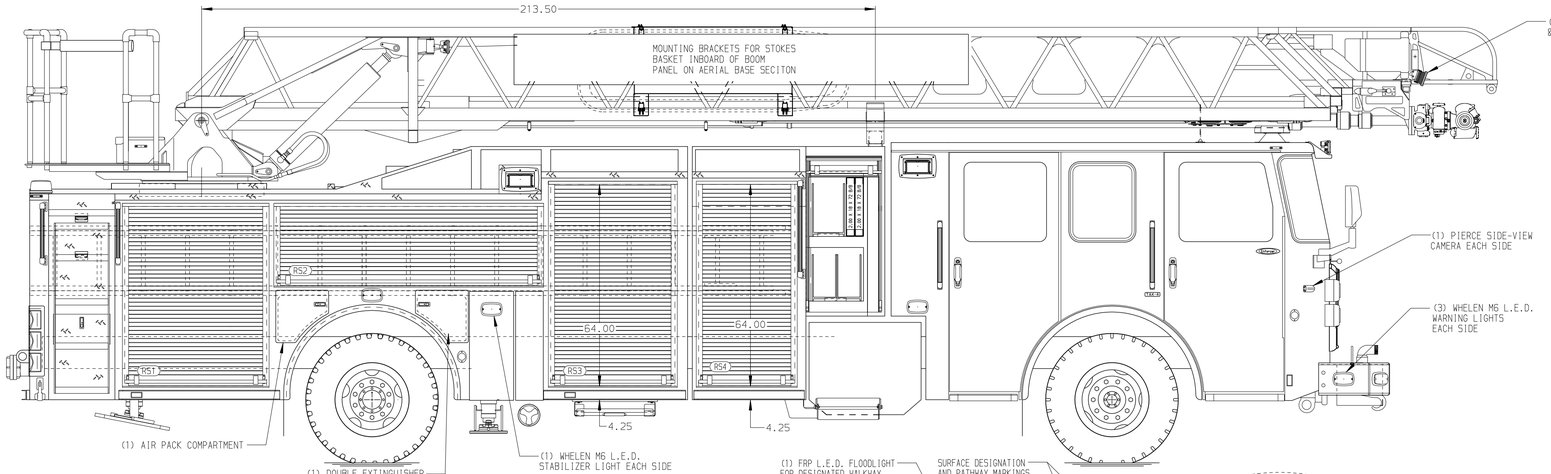

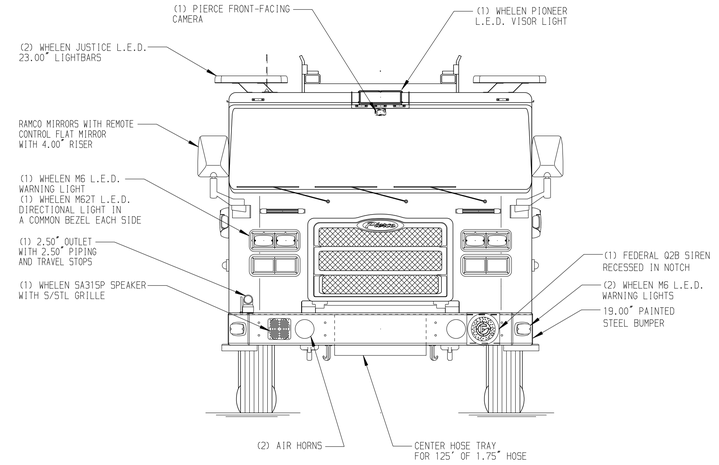

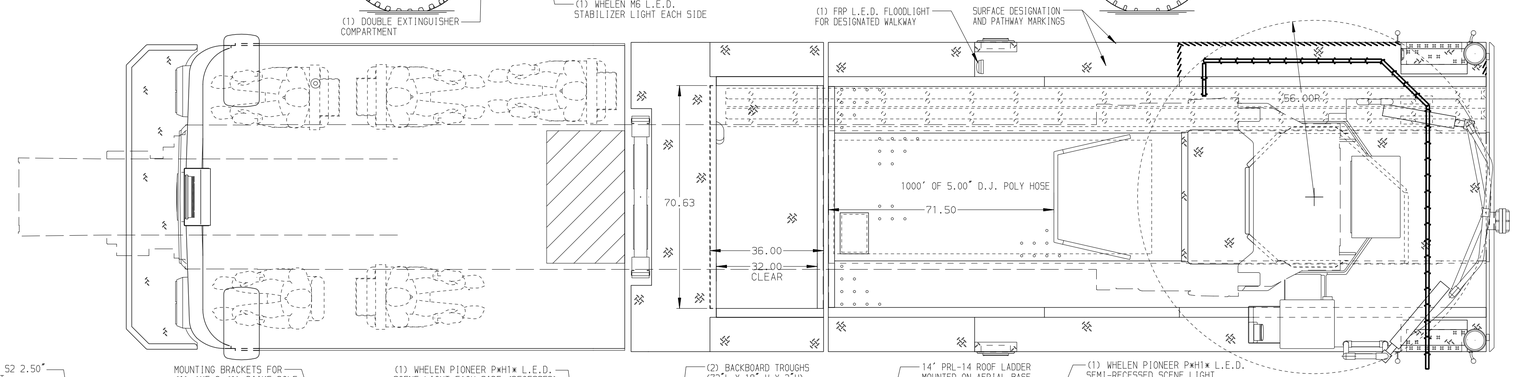

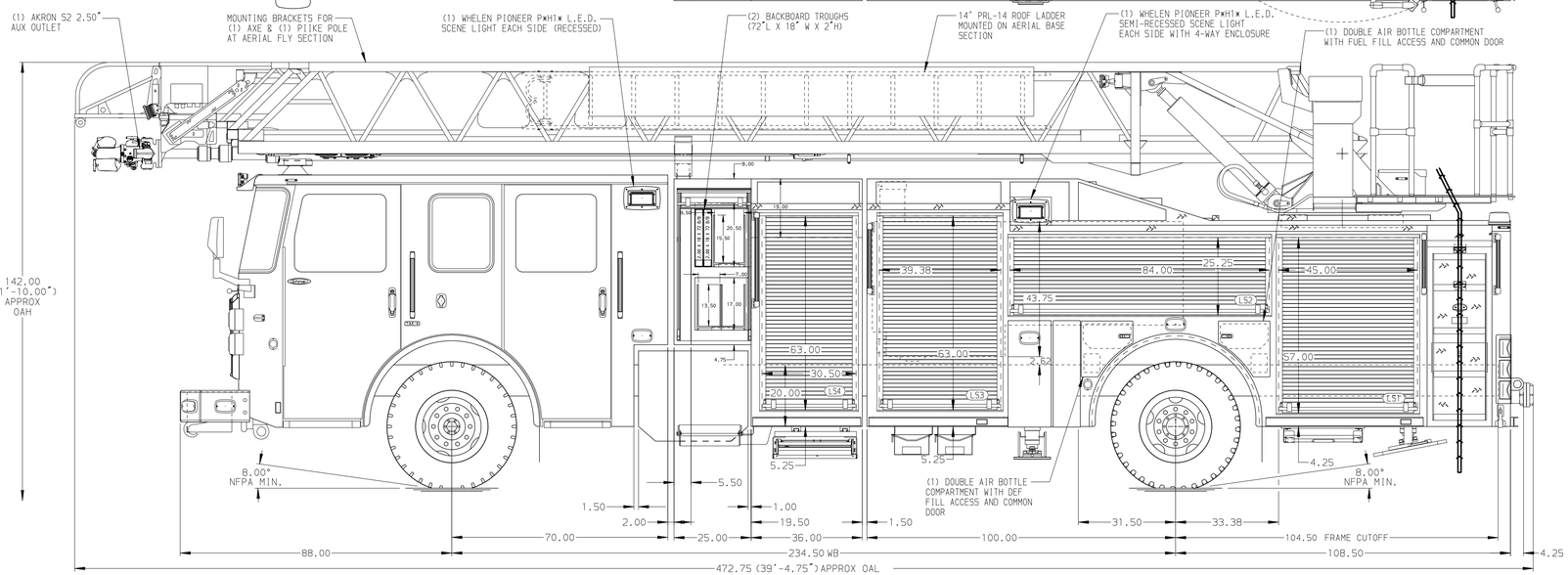

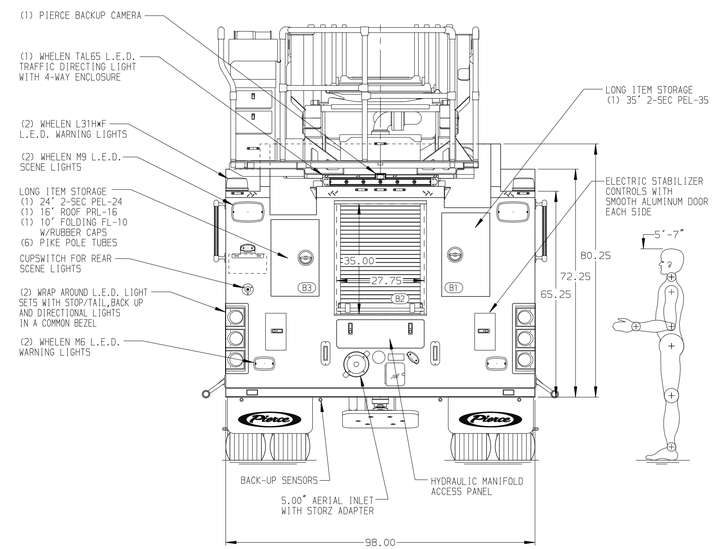

ALUMINUM BODY

NOTE

DIMENSIONS SHOWN ARE APPROXIMATE AND ARE SUBJECT TO MINOR DEVIATIONS AS MAY OCCUR OR BE NECESSARY IN CONSTRUCTION.
MINOR DETAILS NOT SHOWN.

1. NO LIMITED RETRACTION REQUIRED
2. LIFTING EYE ROPE RESCUE ATTACHMENT AT AERIAL TIP
3. SHORELINE RECEPTACLE WITH KUSSMAUL SUPER AUTO-EJECT LOCATED ON DRIVER SIDE OF THE CAB
4. AIR INLET/OUTLET WITH DISCONNECT FITTING ON THE DRIVER SIDE PUMP PANEL
5. BATTERY CHARGER LOCATED PER ORDER
6. BATTERY CHARGE INDICATOR LOCATED ON DRIVER SEAT RISER
7. ONE RECEPTACLE LOCATED IN EMS COMPARTMENT
8. TECNIQ 4-SECTION RUNG LIGHTING AT AERIAL DEVICE
9. 1500 GPM HIGH FLOW WATERWAY

REV	DATE	BY	CH
7	09OCT25	ANZ	JJR
6	25AUG25	ANZ	JJR

CHASSIS DATA
MAKE: PIERCE
MODEL: ENFORCER

Pierce MANUFACTURING INC.

TITLE: 107' ASCENDANT AERIAL LADDER AND BODY ASSEMBLY 500 GALLON WATER TANK
FOR: CLAY COUNTY FIRE RESCUE GREEN COVE SPRINGS, FL
DWG NO.: 40155AD-SH1

JOB NO. 40155
SCALE 1:24
DATE
DRAWN BY ANZ 02JUN25
CHECKED BY JJR 11JUN25
SHEET SIZE D
SHEET NO. 1 OF 2

View File Created 10-OCT-2025 13:28:37