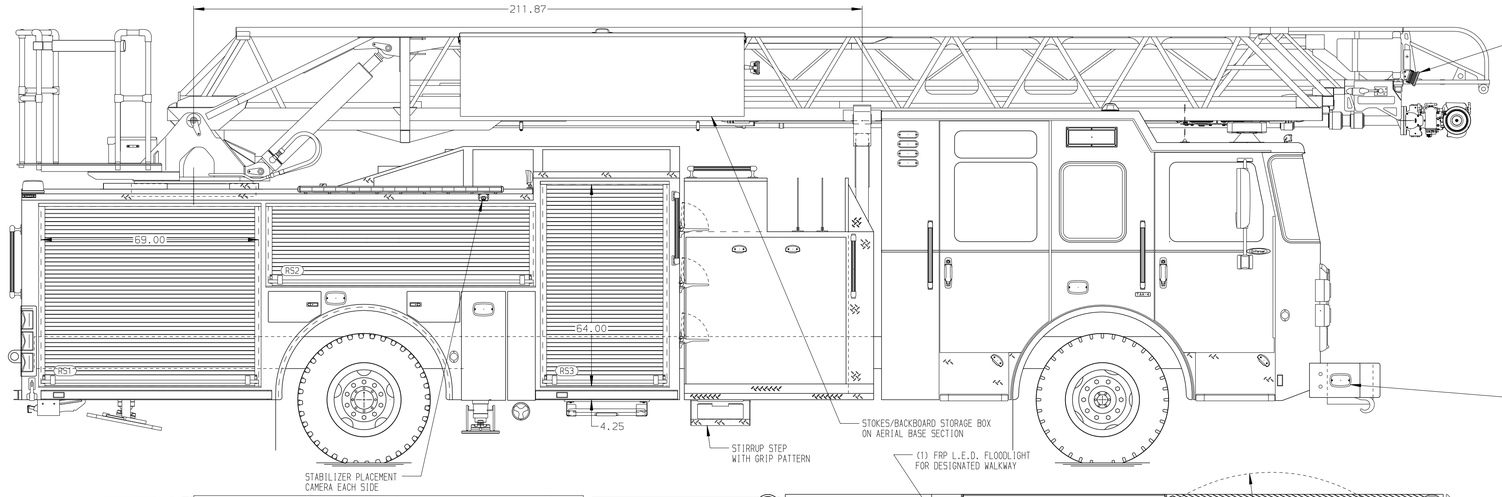

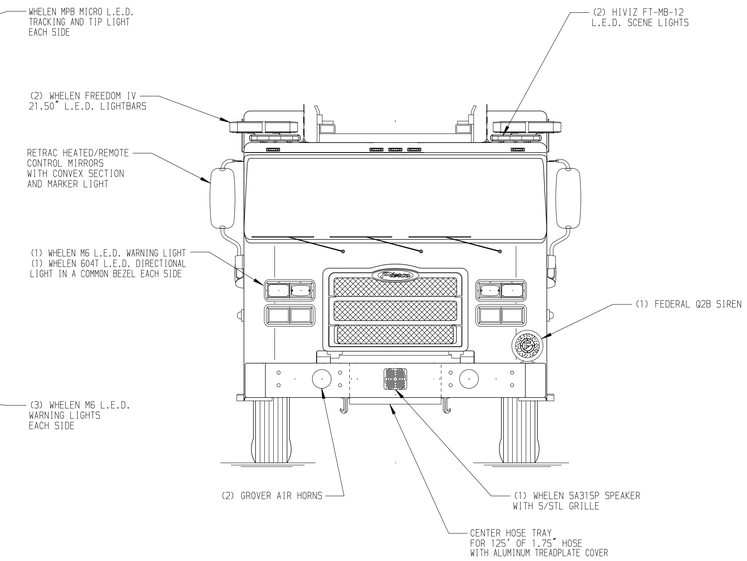

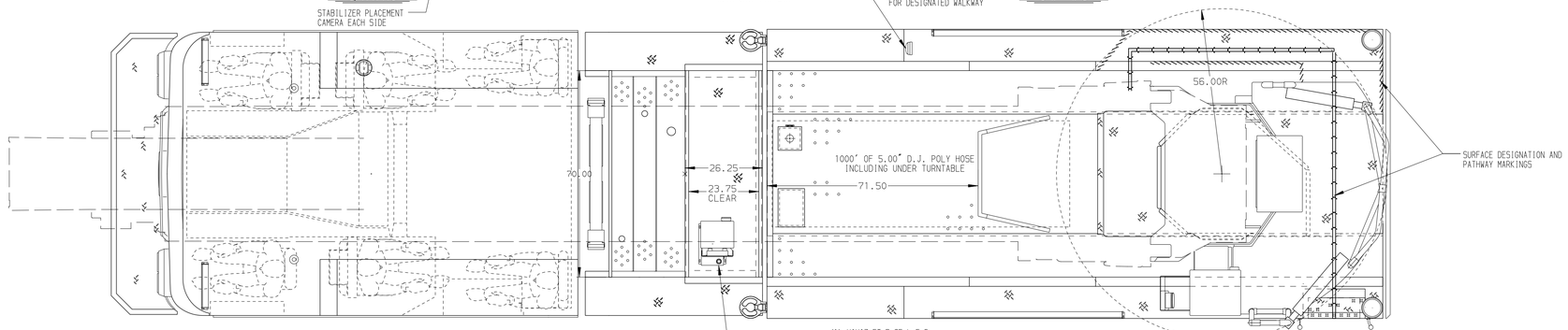

BODY	WATER TANK
107' ASL Aluminum Body	500 Gallon Poly Water Tank
COMPT,LEFT SIDE FRONT	**Foam System**
Full Height Rollup Forward	Husky 3 Single Agent Foam System
COMPT,LEFT SIDE REAR	**Foam Cell**
Full Height Rollup Rearward	20 Gallon Foam Cell, Non Reduced Water
COMPT,RIGHT SIDE FRONT	
Full Height Rollup Forward	
COMPT,RIGHT SIDE REAR	
Full Height Rollup Rearward	

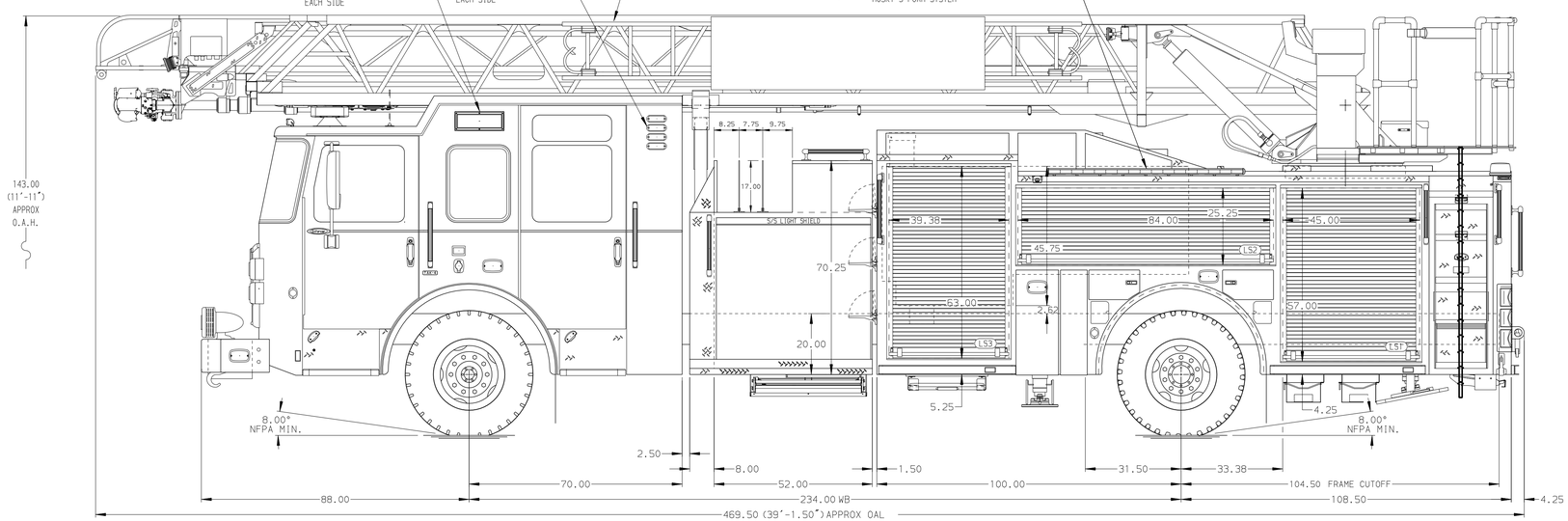

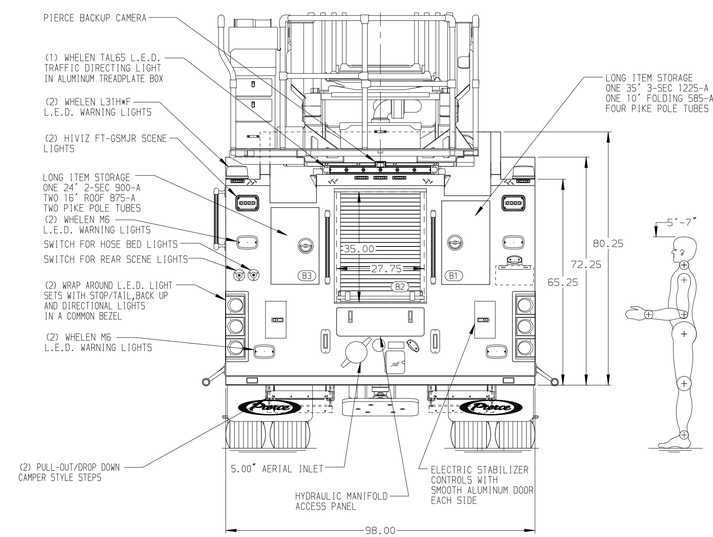

CHASSIS	CAB	AXLE,FRONT,CUSTOM	TRANSMISSION	PUMPHOUSE	CROSSLAYS,1.50"	SPEEDLAYS	SAFETY
Enforcer Chassis	7010 Enforcer Notched Cab	22,800 Lb TAK-4 Axle	Allison 6th Gen, 4000 EVS P	52" Control Zone Side Mount	(2) 1.50" Standard Capacity	Speedlays Not Required	Side Roll and Frontal Impact Protection
ENGINE	**BUMPER**	**AXLE,REAR**		**PUMP**	**CROSSLAYS,2.50"**	**GENERATOR**	
525 HP Cummins X12 Engine	19" Extended Painted Steel	33,500 Lb Meritor Axle		2000 GPM Waterous CSU	(1) 2.50" Standard Capacity	Generator Not Required	

CUSTOMER APPROVAL

APPROVED BY: _____

DATE: _____

Pierce MANUFACTURING INC.

NOTE

DIMENSIONS SHOWN ARE APPROXIMATE AND ARE SUBJECT TO MINOR DEVIATIONS AS MAY OCCUR OR BE NECESSARY IN CONSTRUCTION.
MINOR DETAILS NOT SHOWN.

1. ONE 1.50 OUTLET WITH 2.00 PIPING AND SWIVEL LOCATED IN CENTER BUMPER TRAY
2. SHORELINE RECEPTACLE WITH KUSSMAUL SUPER AUTO-EJECT LOCATED ON DRIVER SIDE OF THE CAB
3. AIR INLET WITH DISCONNECT COUPLING IN THE DRIVER SIDE STEPWELL
4. BATTERY CHARGER LOCATED BEHIND DRIVER SEAT
5. BATTERY CHARGE INDICATOR LOCATED ON DRIVERS SIDE CAB
6. DUAL L.E.D. LIGHT STRIPS LOCATED IN HOSE BED
7. SIX ADJUSTABLE SHELVES LOCATED IN COMPARTMENTS PER ORDER
8. THREE FLOOR MOUNTED SLIDE-OUT TRAYS LOCATED IN COMPARTMENTS PER ORDER
9. NON-RAISED AERIAL PEDESTAL
10. 1500 GPM HIGH FLOW WATERWAY
11. LIMITED RETRACTION NOT REQUIRED
12. MOUNTING PROVISIONS FOR FRONT INLET
13. RUNG LIGHTING ON AERIAL LADDER
14. ONE CTECH CABINET LOCATED IN COMPARTMENT PER ORDER

REV	DATE	BY	CH
7	-	-	-

CHASSIS DATA — MAKE: PIERCE — MODEL: ENFORCER

TITLE: 107' ASCENDANT AERIAL LADDER AND BODY ASSEMBLY 520 GALLON TANK, 500 WATER/20 FOAM

FOR: PIERCE FIELD UNIT APPLETON, WI

DWG NO.: 40162AD

JOB NO.	SCALE	DRAWN BY	CHECKED BY	SHEET SIZE	SHEET NO.
40162	1:24	ANZ	THS	D	1 OF 1

DATE: 13MAR23 — 15MAR23

View File Created 15-MAR-2023 10:13:15