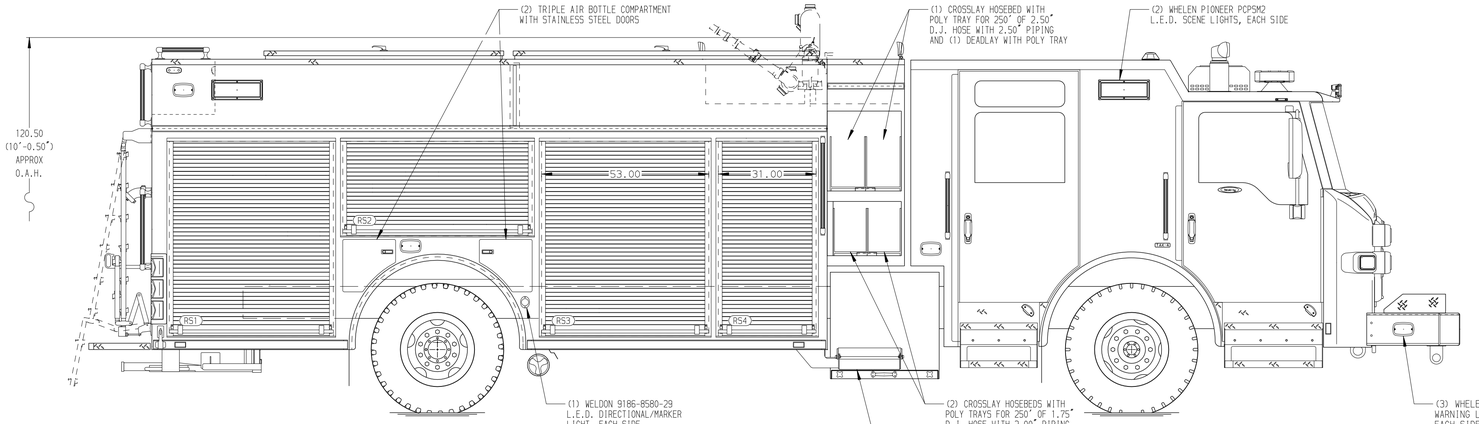

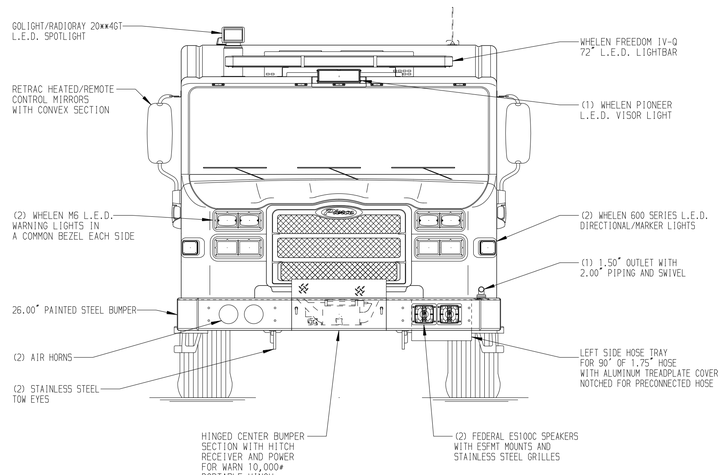

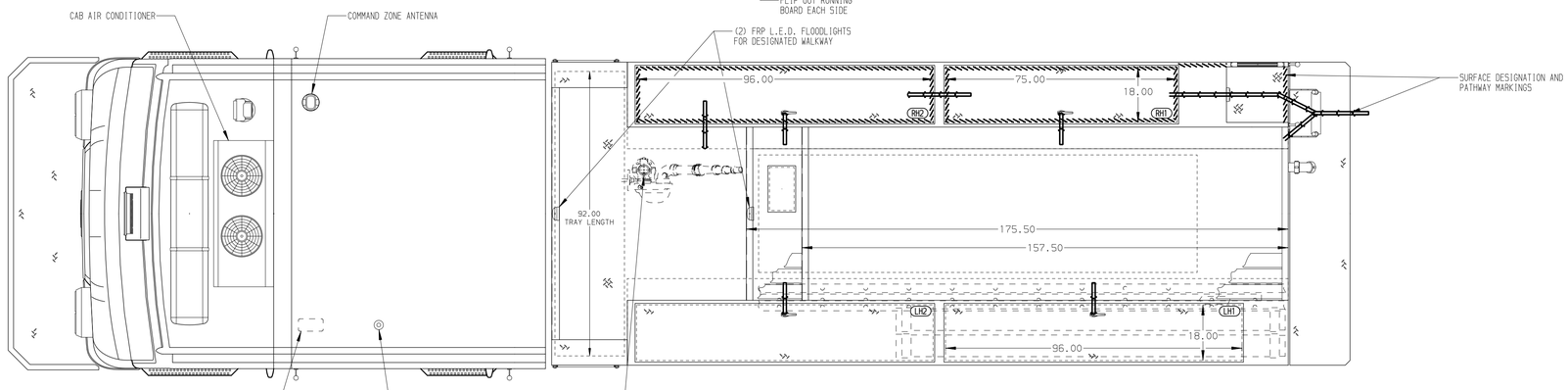

HOSEBED CAPACITIES

(1) 1000' OF 5.00" D.J. POLY HOSE
(2) 1000' OF 3.00" D.J. POLY HOSE

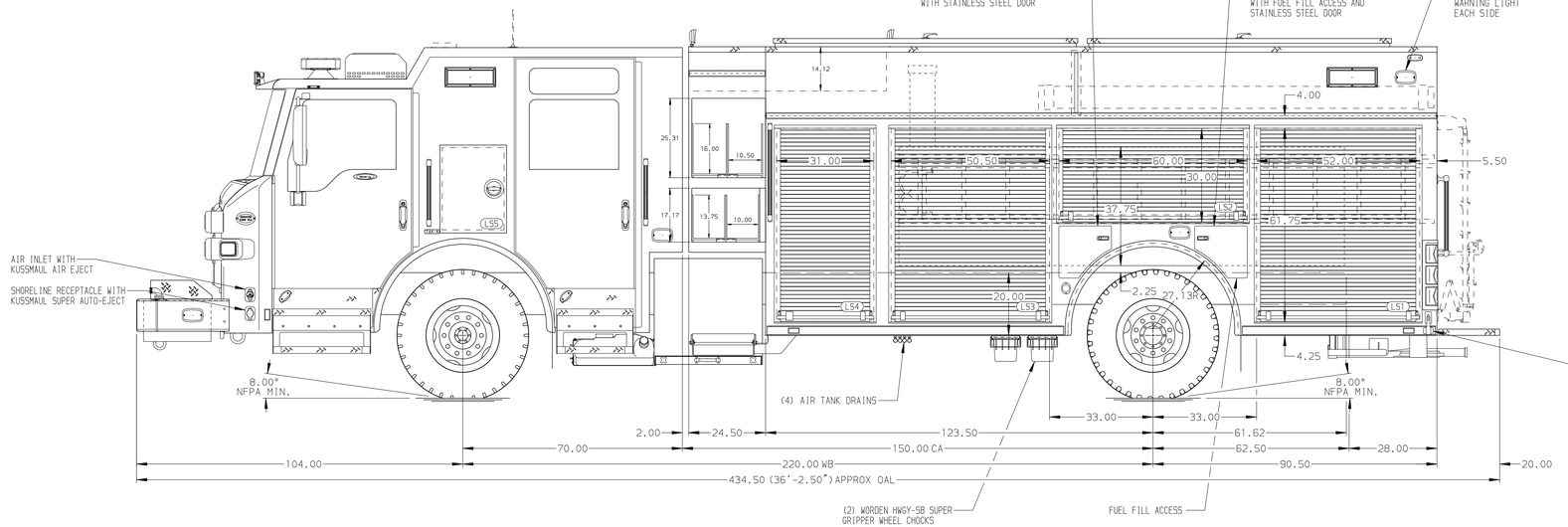

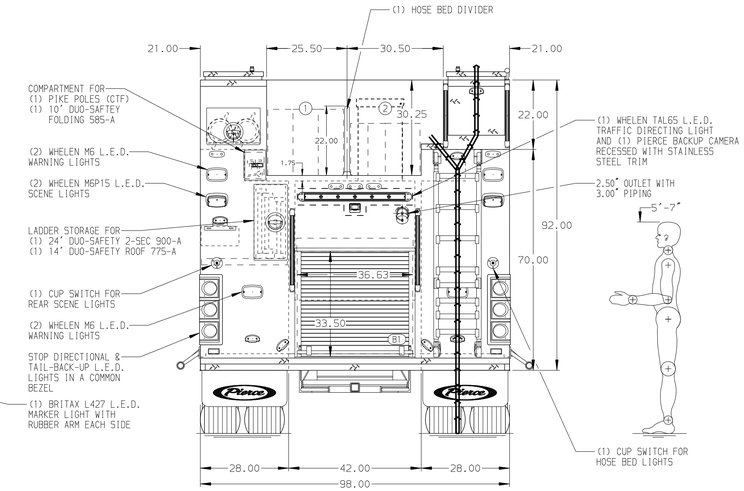

ALUMINUM BODY

SIDE ROLL AND FRONTAL IMPACT PROTECTION

NOTE

DIMENSIONS SHOWN ARE APPROXIMATE AND ARE SUBJECT TO MINOR DEVIATIONS AS MAY OCCUR OR BE NECESSARY IN CONSTRUCTION.
MINOR DETAILS NOT SHOWN.

1. DUAL L.E.D. LIGHT STRIPS LOCATED IN HOSE BED
2. DEF TANK MOUNTED UNDER CAB ON THE DRIVER'S SIDE
3. BATTERY CHARGER/AIR COMPRESSOR LOCATED
4. BATTERY CHARGER LOCATED PER ORDER
5. BATTERY CHARGE INDICATOR LOCATED NEAR DRIVER'S SEAT RISER WITH BRACKET
6. ONE ADDITIONAL POLY TRAY FOR EACH CROSSLAY TO BE SHIPPED LOOSE

REV	DATE	BY	CH
F	26AUG26	JDA	TDC
E	13JUL26	JDA	ARG
D	08JUL26	JDA	ARG
C	25MAR26	JDA	TDC
B	18FEB26	JDA	TDC

CHASSIS DATA
MAKE: PIERCE
MODEL: VELOCITY FR

Pierce MANUFACTURING INC.

TITLE: 1500 GPM, 750G WATERTANK 214" PUC, MUX
FOR: OSHKOSH FIRE DEPARTMENT OSHKOSH, WISCONSIN
DWG NO. 40168AD

JOB NO.	40168
SCALE	1:24
DATE	
DRAWN BY	JDA 19SEP25
CHECKED BY	CDU 19SEP25
SHEET SIZE	D
SHEET NO.	1 OF 1

View File Created 27-AUG-2026 07:25:17