PUMPER

BODY
Medium Stainless Steel 2nd Gen Pumper

CHASSIS
Enforcer Chassis

CHASSIS

AXLE, FRONT, CUSTOM
22,800 Lb TAK-4 Axle

AXLE, REAR
27,000 Lb Dana Axle

ENGINE
450 HP Cummins L9 Engine

TRANSMISSION
Allison 6th Gen, 3000 EVS P

BUMPER
22" Extended Painted Steel

CAB
7000 Enforcer Cab

BODY

TOTAL TANK CAPACITY
500 Gallon New York Style Poly Tank

WATER CAPACITY
500 Gallons of Water

FOAM CELL
Foam Cell Not Required

COMPT, PUMPER, REAR
30.75" FF Lap Rear Compt

COMPT, PUMPER, LEFT SIDE
152" Lap Full Height Front & Rear FDLER

COMPT, PUMPER, RIGHT SIDE
152" Lap Low FDLER

FIRE SUPPRESSION

PUMPHOUSE
45" Control Zone Side Mount

PUMP
1500 GPM Waterous CSU

CROSSLAYS, 1.50"
1.50" Crosslays Not Required

CROSSLAYS, 2.50"
2.50" Crosslay Not Required

SPEEDLAYS
Speedlays Not Required

GENERATOR
Generator Not Required

FOAM SYSTEM
Foam System Not Required

SAFETY

Side Roll and Frontal Impact Protection

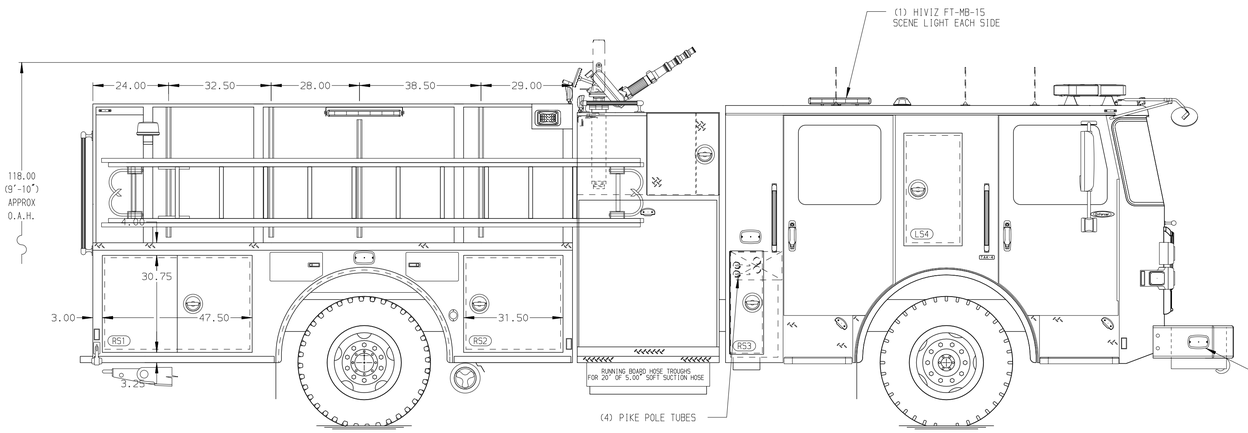

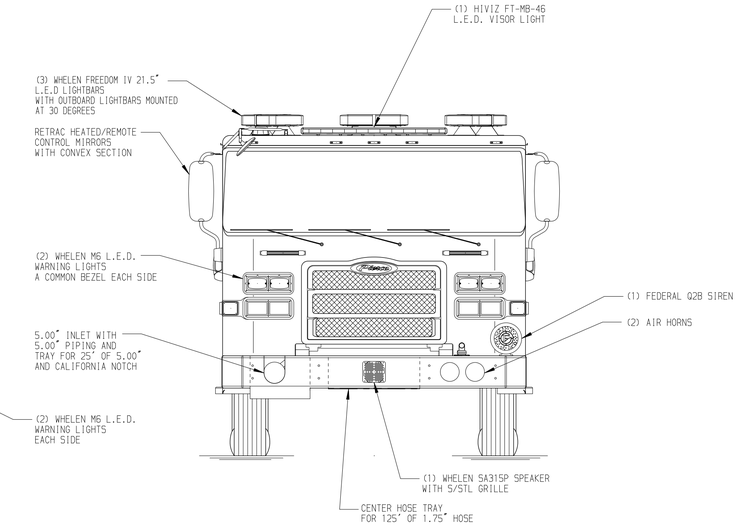

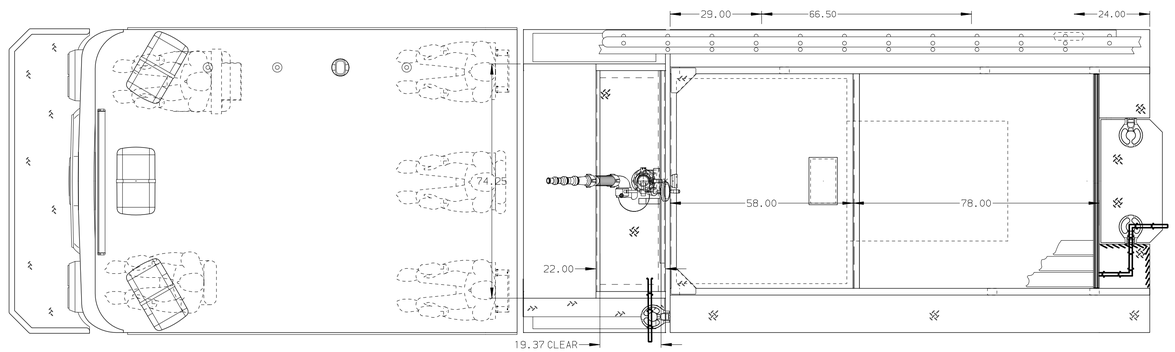

HOSEBED CAPACITY

BED 1
200' OF 1.75" D.J. POLY HOSE

BED 2
200' OF 1.75" D.J. POLY HOSE

BED 3
800' OF 5.00" D.J. POLY HOSE

BED 4
600' OF 2.50" D.J. POLY HOSE

BED 5
200' OF 2.50" D.J. POLY HOSE

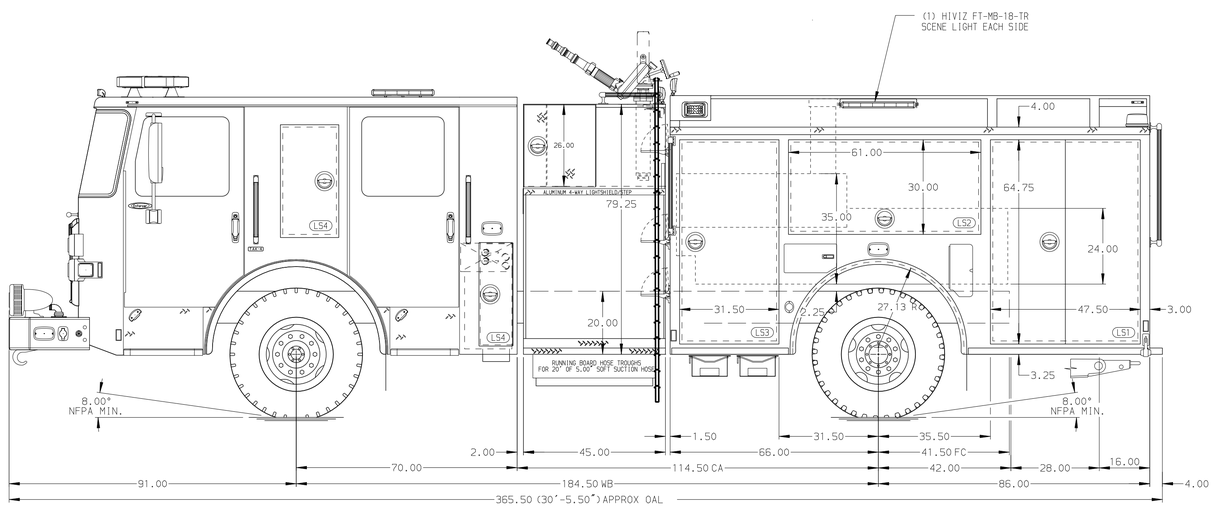

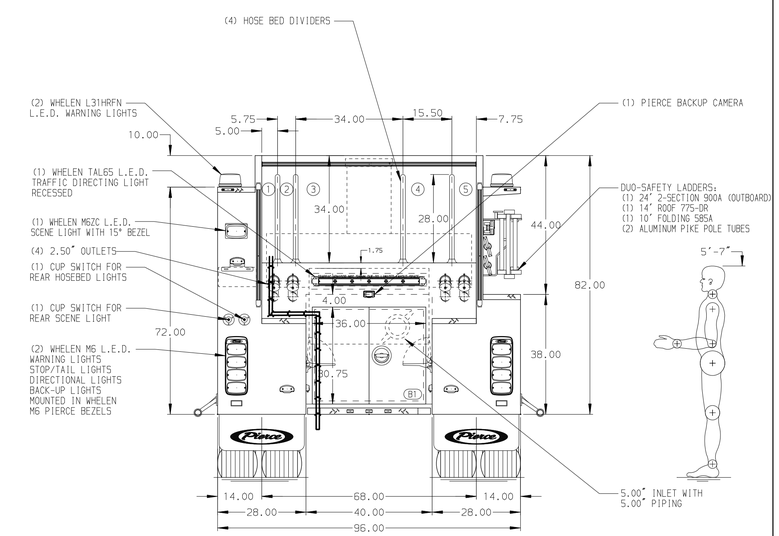

NOTE

DIMENSIONS SHOWN ARE APPROXIMATE AND ARE SUBJECT TO MINOR DEVIATIONS AS MAY OCCUR OR BE NECESSARY IN CONSTRUCTION.
MINOR DETAILS NOT SHOWN.

1. ONE 1.50 OUTLET WITH 2.00 PIPING AND SWIVEL LOCATED ON TOP BUMPER LEFT SIDE
2. SHORELINE RECEPTACLE WITH KUSSMAUL SUPER AUTO-EJECT LOCATED ON DRIVER SIDE BUMPER EXTENSION
3. AIR INLET WITH KUSSMAUL AIR EJECT LOCATED DRIVER SIDE BUMPER EXTENSION
4. BATTERY CHARGER LOCATED PER ORDER
5. BATTERY CHARGE INDICATOR LOCATED ON DRIVER SEAT RISER
6. THREE ADJUSTABLE SHELVES LOCATED PER ORDER
7. TWO FLOOR MOUNTED SLIDE-OUT TRAY LOCATED PER ORDER

REV	DATE	BY	CH
3	14JAN25	MMF	TDC
2	030CT24	MMF	TDC
1	12JUL24	MMF	TDC

CHASSIS DATA
MAKE: PIERCE
MODEL: ENFORCER

Pierce MANUFACTURING INC.

TITLE: Pierce Pumper Approval Drawing
FOR: Manitowoc Fire Department
DWG NO.: 40185AD

JOB NO.	40185
SCALE	1:24
DATE	
DRAWN BY	MMF 22MAY24
CHECKED BY	AMI 28MAY24
SHEET SIZE	D
SHEET NO.	1 OF 1

View File Created 14-JAN-2025 08:48:00