Pumper, PUC

BODY
Pumper, PUC, Aluminum

CHASSIS
Velocity Chassis, PUC (Big Block)

CHASSIS

AXLE,FRONT,CUSTOM
22,800 Lb TAK-4 Axle

AXLE,REAR
31,000 Lb Meritor Axle

ENGINE
510 HP Paccar MX13 Engine

TRANSMISSION
Allison 6th Gen, 4000 EVS P

BUMPER
19" Extended Painted Steel

CAB
7010 Velocity FR Cab, PUC

BODY

TOTAL TANK CAPACITY
1020 Gallon Poly Tank

WATER CAPACITY
1000 Gallons of Water

FOAM CELL CAPACITY
20 Gallon Foam Cell

COMPT,PUMPER,REAR
33.50" FF Rollup Rear Compt w/Tailboard, PUC

COMPT,PUMPER,LEFT SIDE
189" Rollup Full Height & Depth Front & Rear, PUC

COMPT,PUMPER,RIGHT SIDE
189" Rollup Full Height & Depth Front & Rear, PUC

FIRE SUPPRESSION

PUMPHOUSE
Control Zone, PUC

PUMP
1500 GPM Pierce PUC

CROSSLAYS,1.50"
(2) 1.50", Poly Trays, 200'

CROSSLAYS,2.50"
(1) 2.50", Poly Tray, 200'

SPEEDLAYS

GENERATOR
Generator Not Required

FOAM SYSTEM
Husky 3 Single Agent Foam System

SAFETY

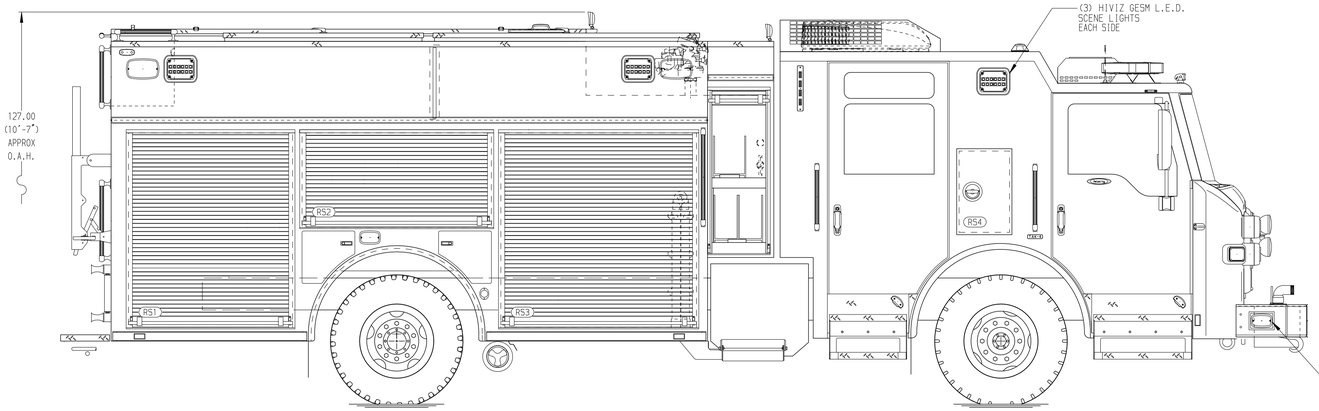

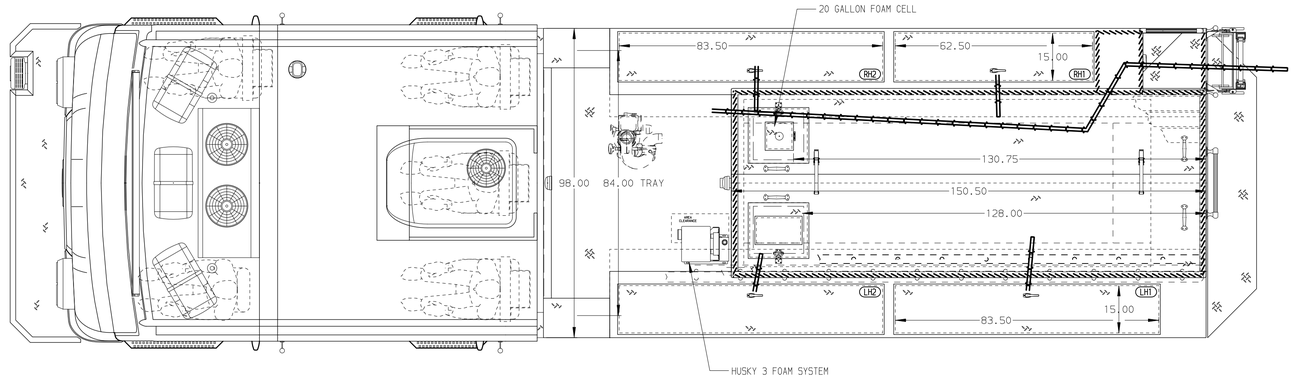

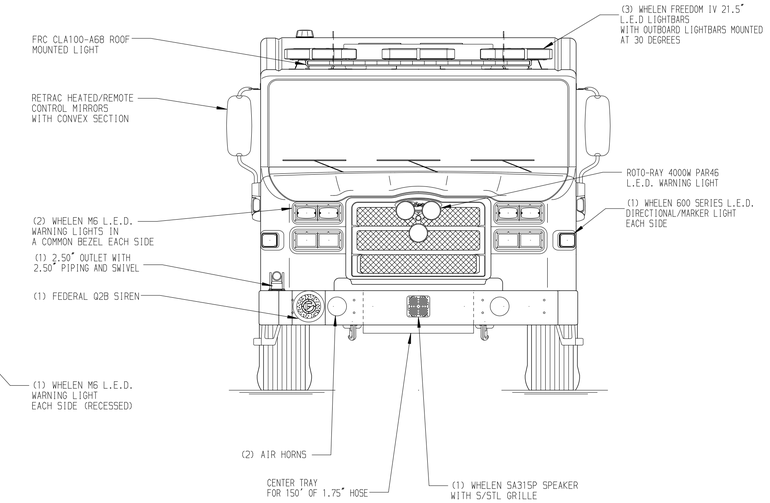

HOSEBED CAPACITY

BED 1
1000' OF 5.00" D.J. POLY HOSE

BED 2
300' OF 2.50" D.J. POLY HOSE

BED 3
300' OF 1.75" D.J. POLY HOSE

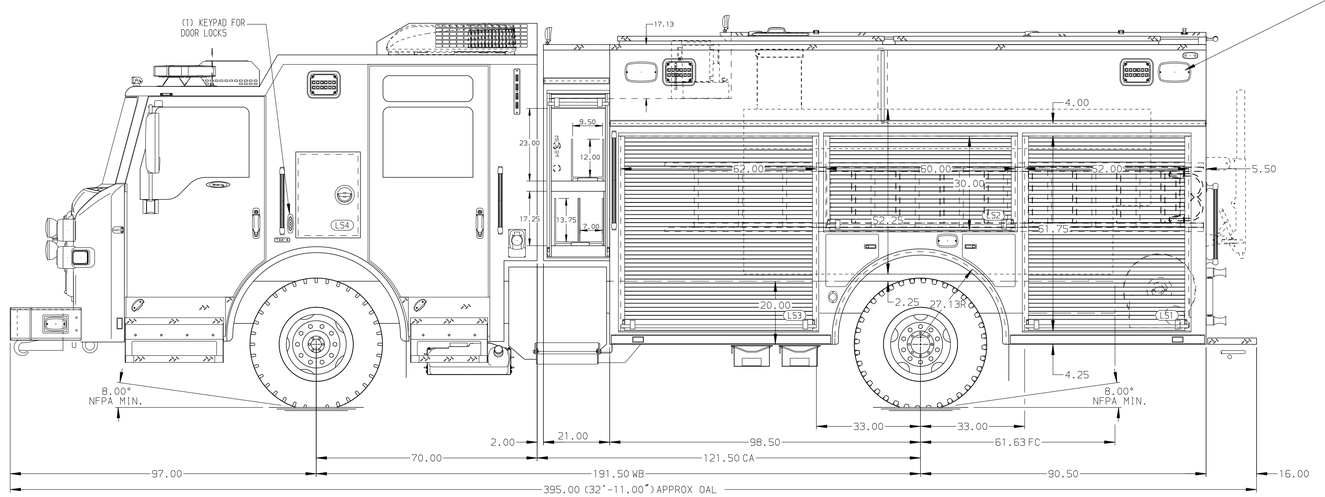

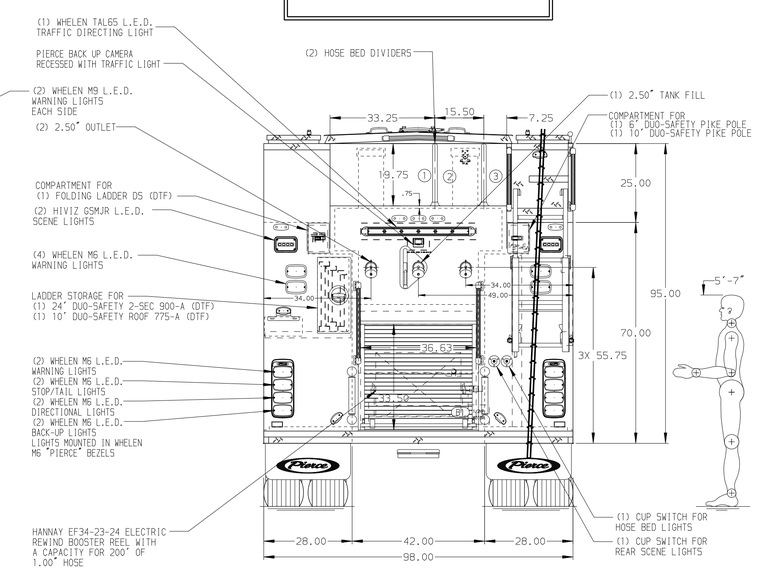

NOTE

DIMENSIONS SHOWN ARE APPROXIMATE AND ARE SUBJECT TO MINOR DEVIATIONS AS MAY OCCUR OR BE NECESSARY IN CONSTRUCTION.
MINOR DETAILS NOT SHOWN.

1. SHORELINE RECEPTACLE WITH KUSSMAUL SUPER AUTO-EJECT LOCATED ON DRIVER SIDE OF THE CAB
2. AIR INLET WITH DISCONNECT COUPLING LOCATED ON THE PUMP PANEL
3. BATTERY CHARGER LOCATED PER ORDER
4. BATTERY CHARGE INDICATOR LOCATED ON DRIVER SEAT RISER
5. FOUR ADJUSTABLE SHELVES LOCATED PER ORDER
6. THREE FLOOR MOUNTED SLIDE-OUT TRAYS LOCATED PER ORDER
7. ONE TILT/SLIDE-OUT TRAYS LOCATED PER ORDER
8. CTECH CABINET LOCATED PER ORDER
9. TWO SWING-OUT TOOLBOARD LOCATED PER ORDER
10. SUB FEED BREAKER BOX IN HATCH COMPT.
11. PEGBOARD BACK WALL MOUNTED PER ORDER
12. FOUR RECEPTACLES PER ORDER
13. LITTLE GIANT LADDER LOCATED IN LS3

REV	DATE	BY	CH
3	30OCT24	JAM	JLL
2	19AUG24	JAM	JLL
1	28JUN24	JAM	JLL

CHASSIS DATA
MAKE: PIERCE
MODEL: VELOCITY

Pierce MANUFACTURING INC.

TITLE: Pierce PUC Pumper Approval Drawing
FOR: Terrell Fire Department
DWG NO.: 40187AD

JOB NO. 40187 01-02
SCALE 1:24
DATE
DRAWN BY JAM 11APR24
CHECKED BY MMF 12APR24
SHEET SIZE D
SHEET NO. 1 OF 1

View File Created 31-OCT-2024 09:02:36