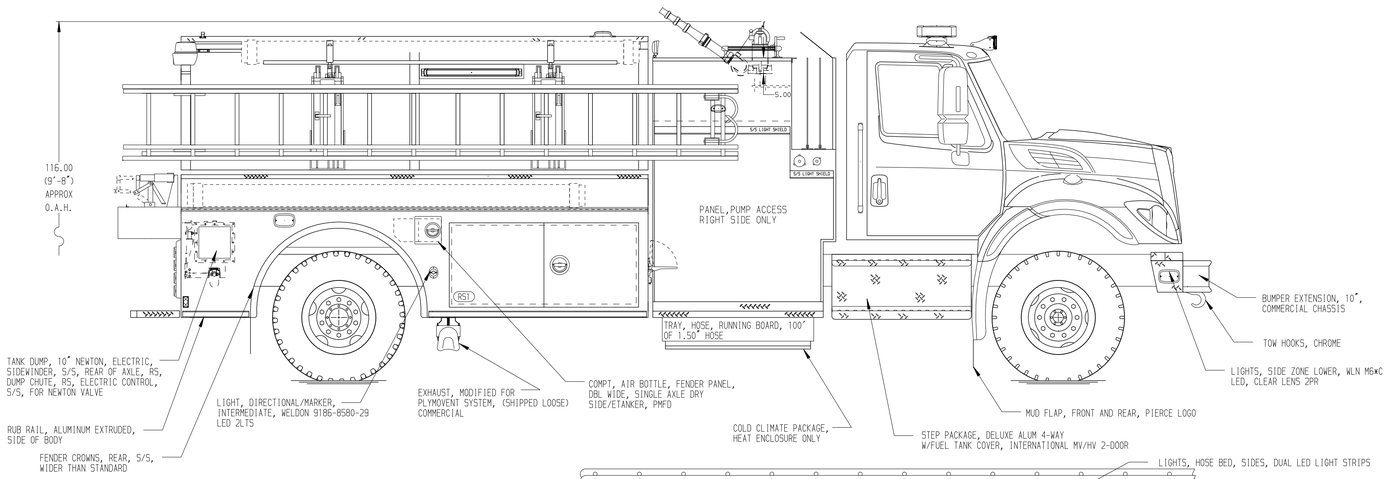

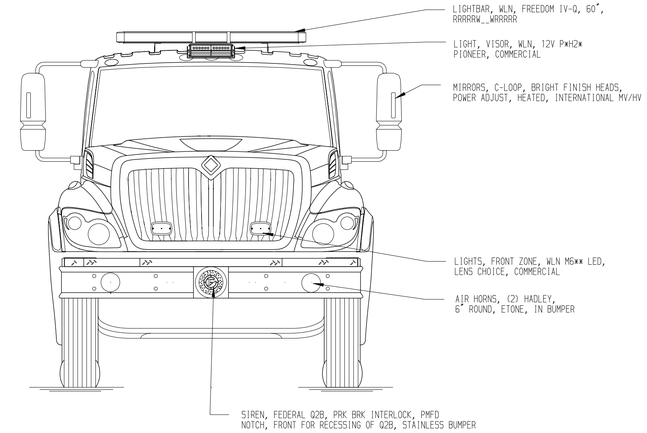

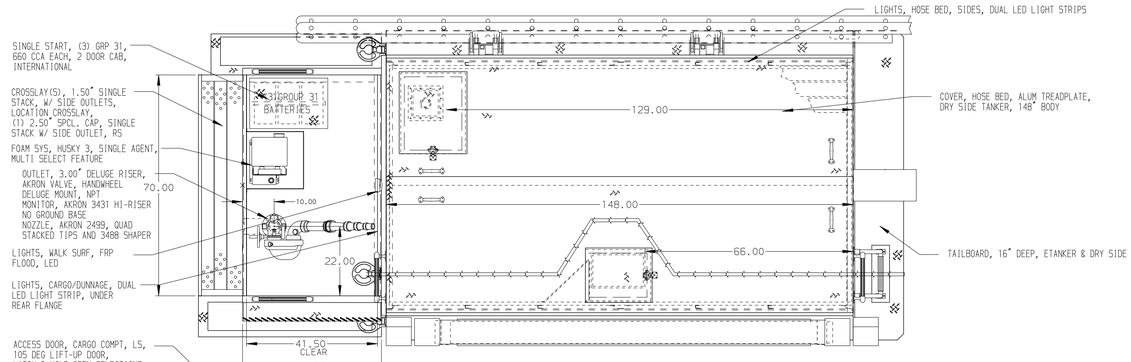

HOSEBED CAPACITIES
1. 1200' OF 4.00" LDH
2. 300' OF 2.50" D.J. POLYESTER HOSE

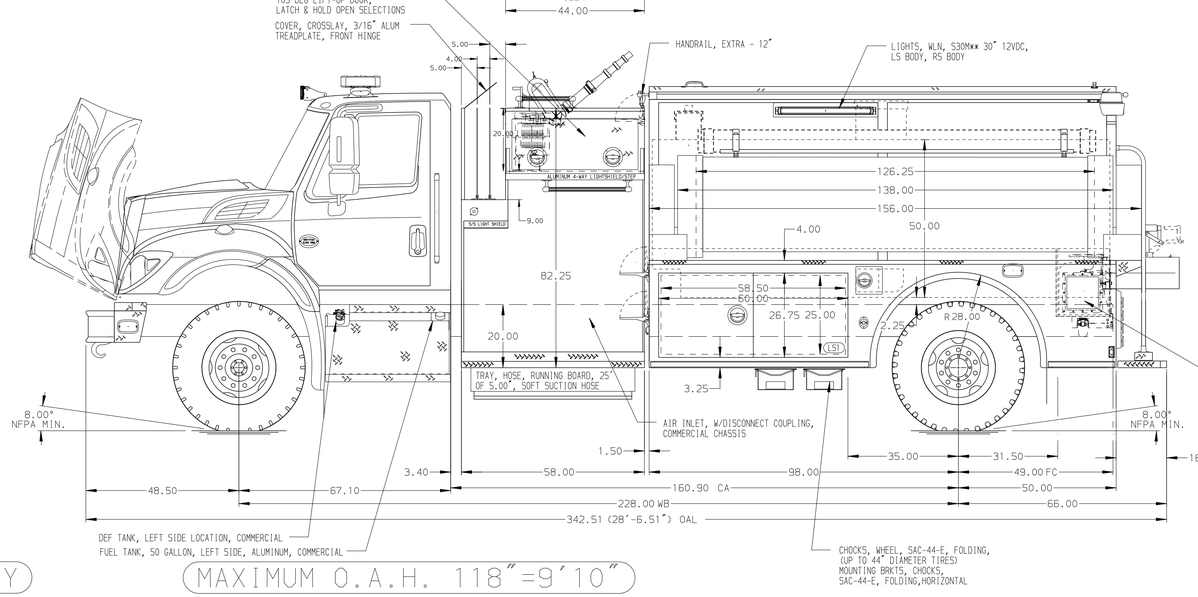

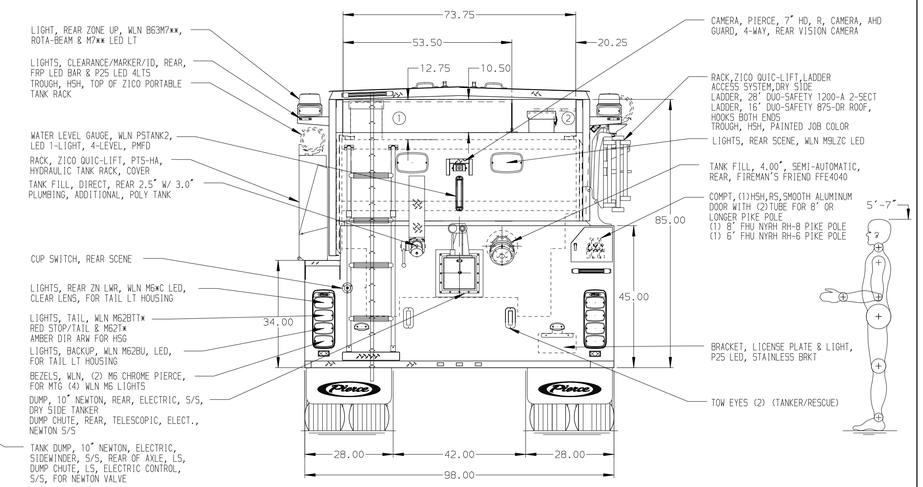

ALUMINUM BODY

MAXIMUM O.A.H. 118"=9'10"

NOTE

DIMENSIONS SHOWN ARE APPROXIMATE AND ARE SUBJECT TO MINOR DEVIATIONS AS MAY OCCUR OR BE NECESSARY IN CONSTRUCTION.
MINOR DETAILS NOT SHOWN.

REV	DATE	BY	CH
7	11DEC24	ADP	EEM
6	14OCT24	VHO	AJA

CHASSIS DATA
MAKE: IHC
MODEL: HV607

Pierce MANUFACTURING INC.
BRADENTON, FLORIDA

TITLE: 1500GPM, 1800G TANK, 1780G WATER, 20G FOAM 148" BODY TANKER DRY SIDE, HARDWIRED
FOR: LISBON FIRE DEPARTMENT LISBON, ME
DWG NO.: 40204AD

JOB NO.	40204
SCALE	1:24
DATE	
DRAWN BY	VHO
DATE	30AUG24
CHECKED BY	AJA
DATE	05SEP24
SHEET SIZE	D
SHEET NO.	1 OF 1

View File Created 24-FEB-2025 07:49:47