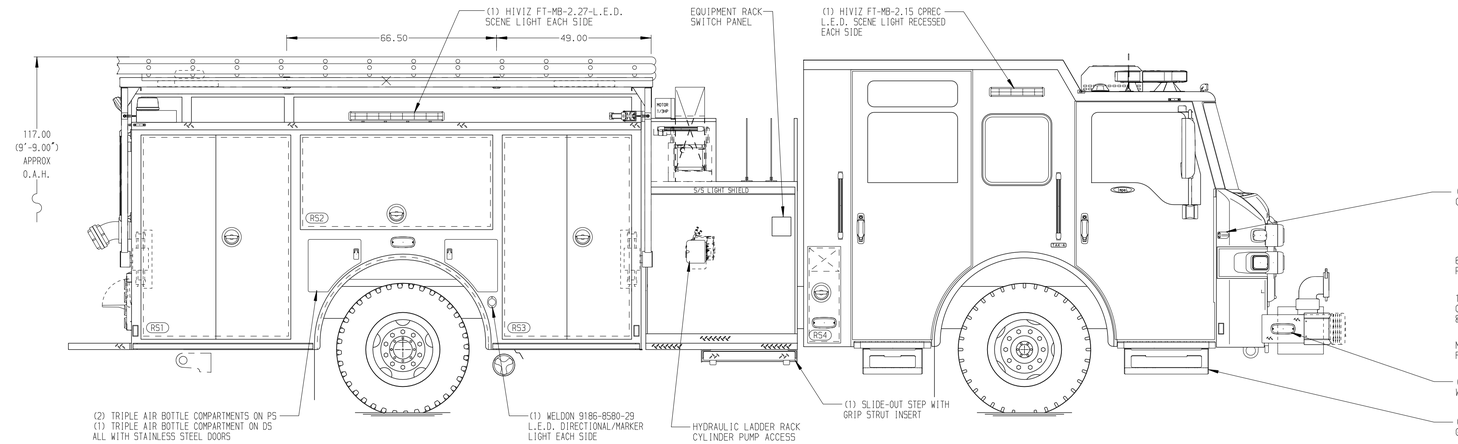

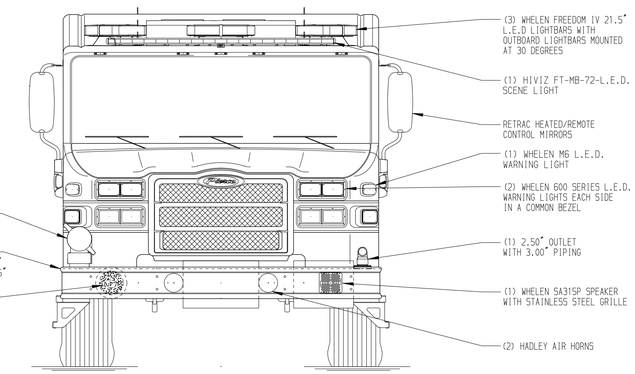

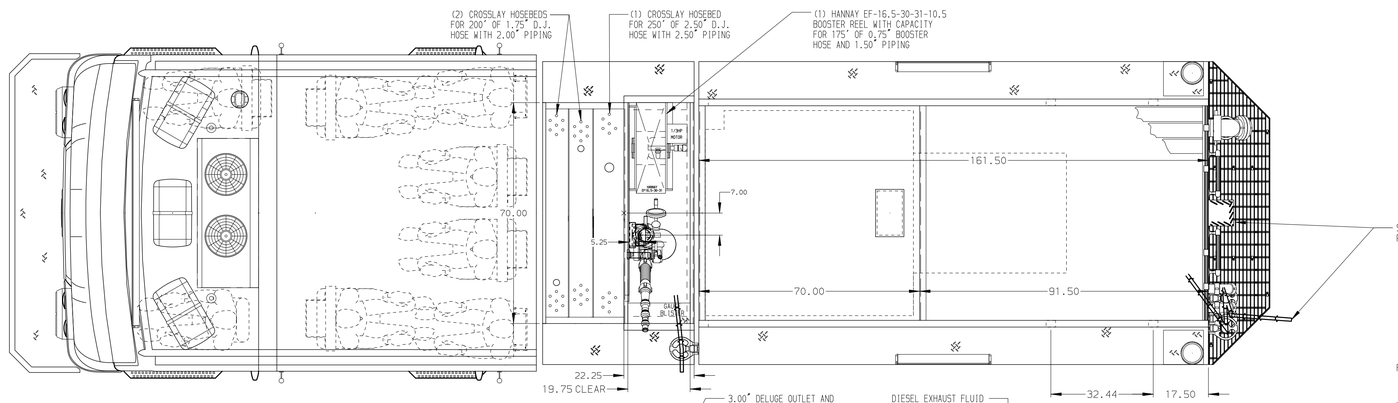

HOSEBED CAPACITIES

1. 500' OF 2.50" D.J. HOSE WITH 200' OF 1.75" D.J. HOSE ON TOP
2. 500' OF 2.50" D.J. HOSE WITH 200' OF 1.75" D.J. HOSE ON TOP
3. 975' OF 5.00" D.J. HOSE
4. 500' OF 2.50" D.J. HOSE
5. 300' OF 3.00" D.J. HOSE

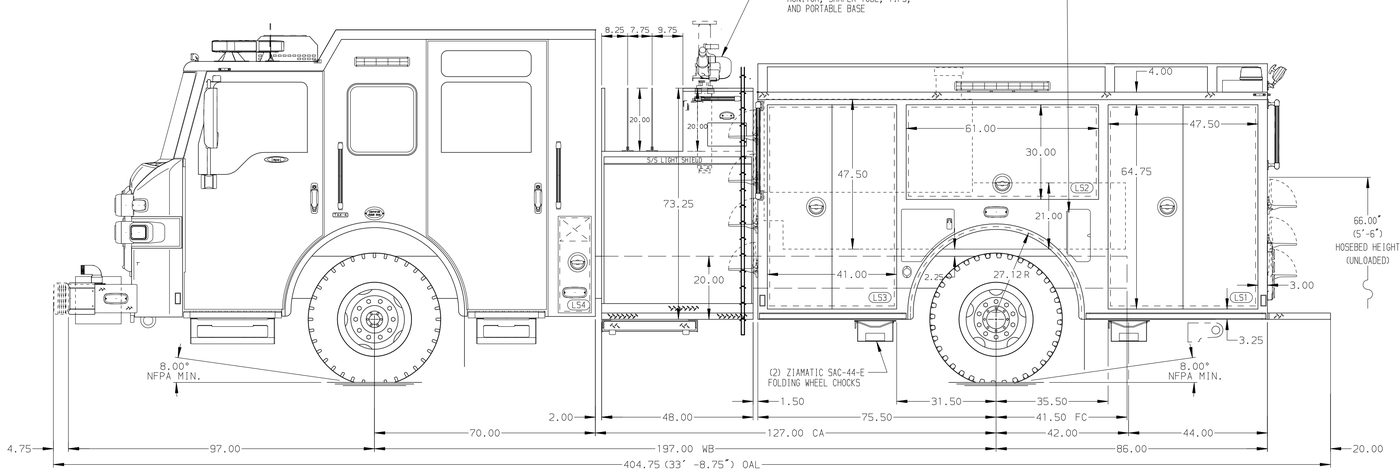

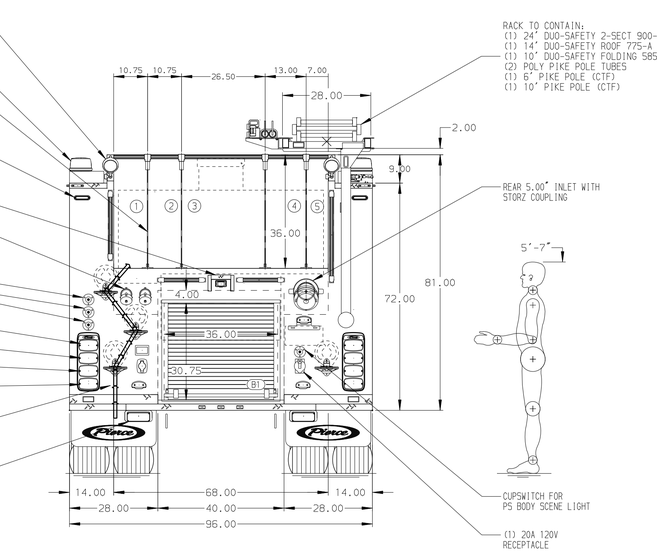

ALUMINUM BODY | MAXIMUM O.A.L. 404.75" | MAXIMUM O.A.H. 123.00" | SIDE ROLL AND FRONTAL IMPACT PROTECTION

NOTE

DIMENSIONS SHOWN ARE APPROXIMATE AND ARE SUBJECT TO MINOR DEVIATIONS AS MAY OCCUR OR BE NECESSARY IN CONSTRUCTION.
MINOR DETAILS NOT SHOWN.

1. AIR INLET/OUTLET W/DISCONNECT FITTING LOCATED IN DS PUMP PANEL
2. BATTERY CHARGER LOCATED BEHIND DRIVER'S SEAT
3. BATTER INDICATOR LOCATED PER ORDER
3. XANTREX FREEDOM X INVERTER LOCATED PER ORDER

REV	DATE	BY	CH
5	24MAR26	KLE	ARG
4	18FEB26	JER	ARG
3	12DEC25	JER	ARG
2	02DEC25	JER	ARG
1	11NOV25	JER	ARG

CHASSIS DATA: MAKE PIERCE; MODEL IMPEL FR

Pierce MANUFACTURING INC.

TITLE: 750G TANK, 750G WATER, 0 FOAM IMPEL 161", IMPEL ESP

FOR: KINGS PARK FIRE DISTRICT, KINGS PARK, NEW YORK

DWG NO.: 40210AD-SH1

JOB NO.	40210
SCALE	1:24
DATE	
DRAWN BY	JER 16SEP25
CHECKED BY	SZE 17SEP25
SHEET SIZE	D
SHEET NO.	1 OF 2

View File Created 24-MAR-2026 10:46:54