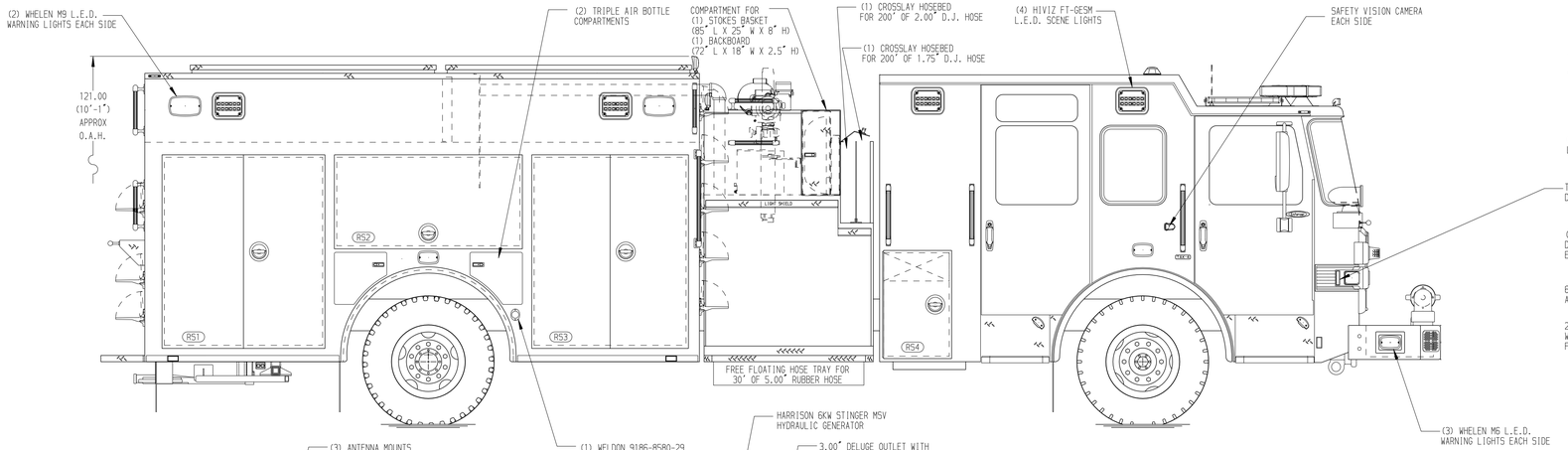


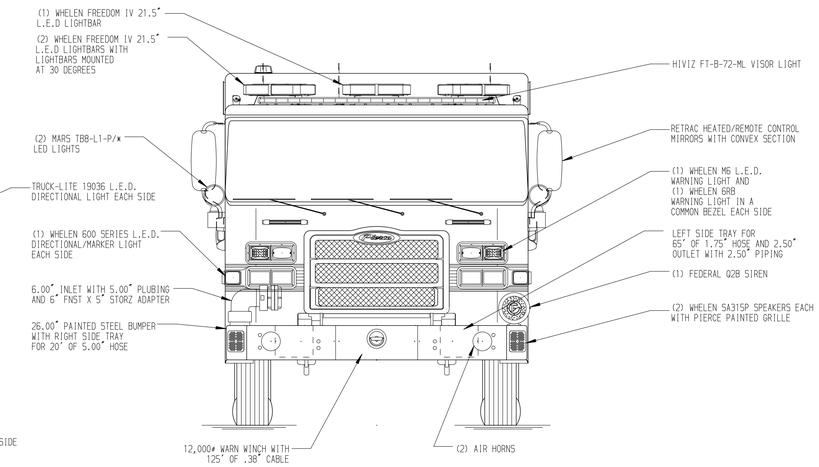


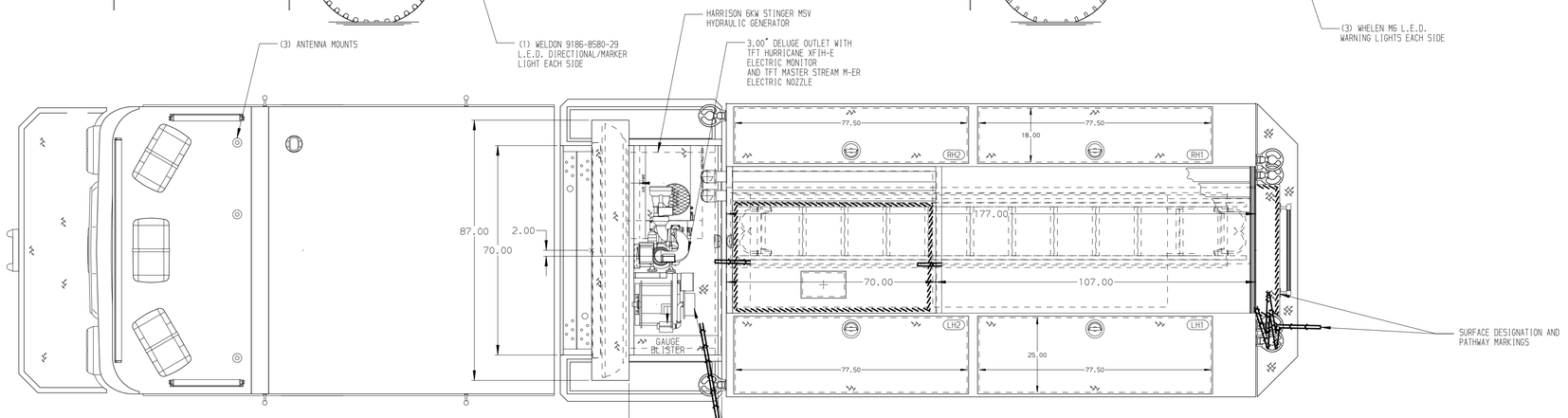


HOSEBED CAPACITIES

1. 1000' OF 5.00" RUBBER HOSE
2. 600' OF 2.50" D.J. POLY HOSE
3. 300' OF 2.50" D.J. POLY HOSE (PRECONNECTED)
4. 300' OF 1.75" D.J. POLY HOSE (PRECONNECTED)

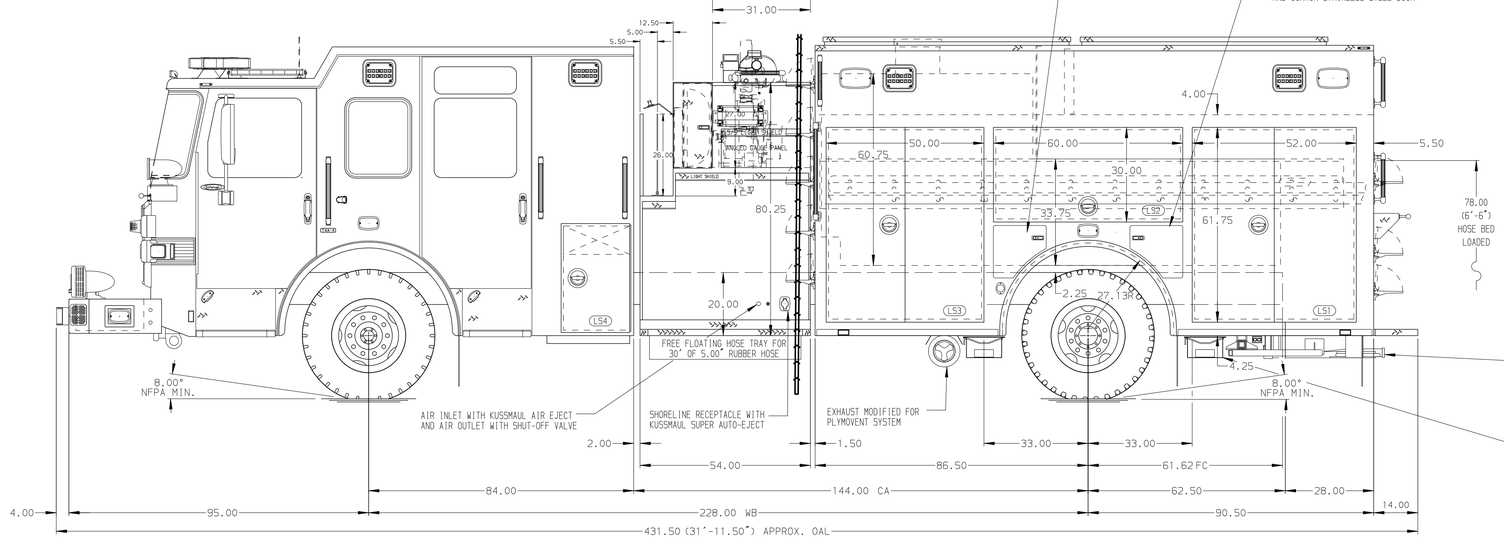


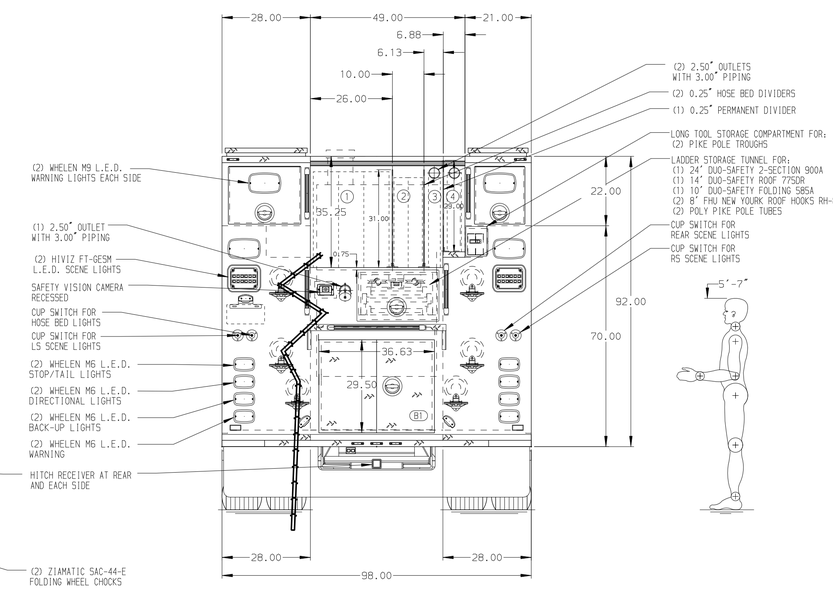


ALUMINUM BODY

NOTE

DIMENSIONS SHOWN ARE APPROXIMATE AND ARE SUBJECT TO MINOR DEVIATIONS AS MAY OCCUR OR BE NECESSARY IN CONSTRUCTION.
MINOR DETAILS NOT SHOWN.

1. ONSPOT AUTOMATIC TIRE CHAINS TO BE PROVIDED AT REAR
2. ALUMINUM 4-WAY ON CAB ROOF
3. KUSSMAUL BATTERY CHARGER LOCATED BEHIND THE DRIVER'S SEAT
4. BATTERY CHARGER INDICATOR LOCATED ON DRIVER'S SEAT RISER

| REV | DATE | BY | CH |
|---|---|---|---|
| 5 | 05MAY26 | KLE | COS |
| 4 | 10MAR26 | MPM | COS |
| 3 | 5DEC25 | MPM | COS |
| 2 | 28OCT25 | KLE | COS |
| 1 | 29AUG25 | KLE | SZE |

CHASSIS DATA
MAKE: PIERCE
MODEL: ENFORCER

**Pierce MANUFACTURING INC.**

TITLE: 2000 GPM, 750G TANK, 750G WATER, 0G FOAM 177" HDRP, MUX
FOR: BOROUGH OF WOODCLIFF LAKE WOODCLIFF LAKE, NEW JERSEY
DWG NO. 40222AD-SH1

| | |
|---|---|
| JOB NO. | 40222 |
| SCALE | 1:24 |
| DATE | |
| DRAWN BY | KLE |
| DATE | 22AUG25 |
| CHECKED BY | SZE |
| DATE | 22AUG25 |
| SHEET SIZE | D |
| SHEET NO. | 1 OF 2 |

View File Created 16-JUN-2026 07:13:15