PUMPER

BODY
Long Aluminum 2nd Gen Pumper

CHASSIS
Enforcer Chassis

CHASSIS

AXLE, FRONT, CUSTOM
22,800 lb TAK-4 Axle

AXLE, REAR
27,000 lb Dana Axle

ENGINE
450 HP Cummins L9 Engine

TRANSMISSION
Allison 6th Gen, 3000 EVS P

BUMPER
19" Extended Painted Steel

CAB
8410 Enforcer Cab

BODY

TOTAL TANK CAPACITY
750 Gallon New York Style Poly Tank

WATER CAPACITY
750 Gallons of Water

FOAM CELL
Foam Cell Not Required

COMPT, PUMPER, REAR
30.75" FF RollUp Rear Compt

COMPT, PUMPER, LEFT SIDE
161" RollUp Full Height Front & Rear FDLER

COMPT, PUMPER, RIGHT SIDE
161" RollUp Full Height Front & Rear FDLER

FIRE SUPPRESSION

PUMPHOUSE
45" Control Zone Top Mount

PUMP
2000 GPM Waterous CSU

CROSSLAYS, 1.50"
(2) 1.50" Standard Capacity

CROSSLAYS, 2.50"
2.50" Crosslay Not Required

SPEEDLAYS
Speedlays Not Required

GENERATOR
Generator Not Required

FOAM SYSTEM
Foam System Not Required

SAFETY

Frontal Impact Protection

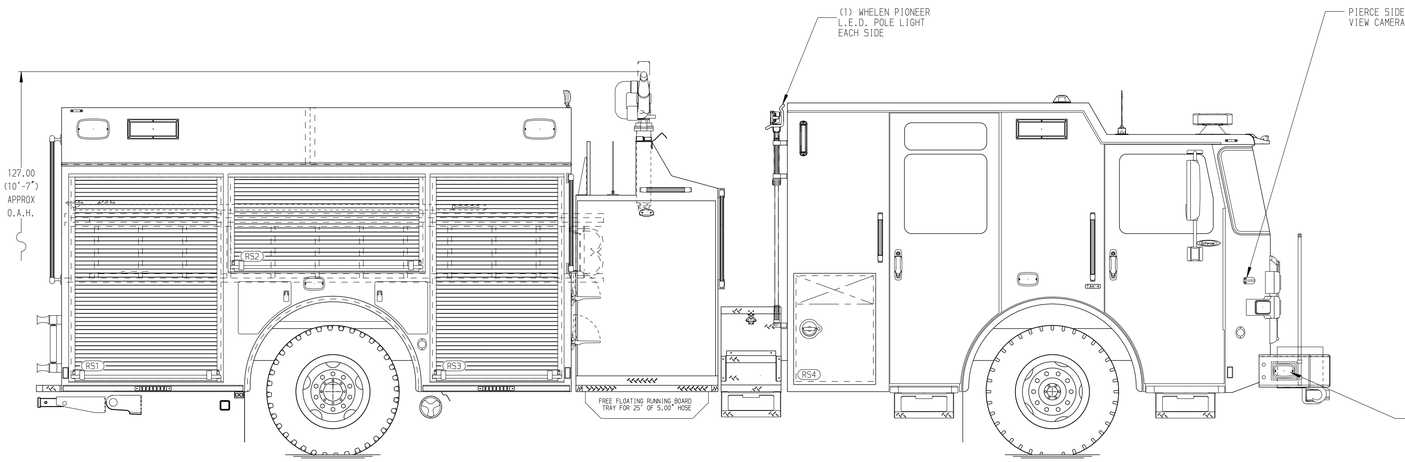

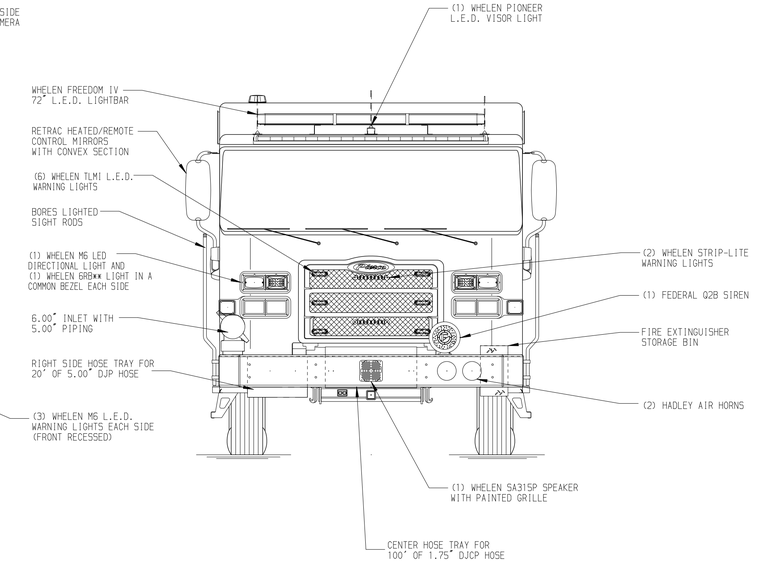

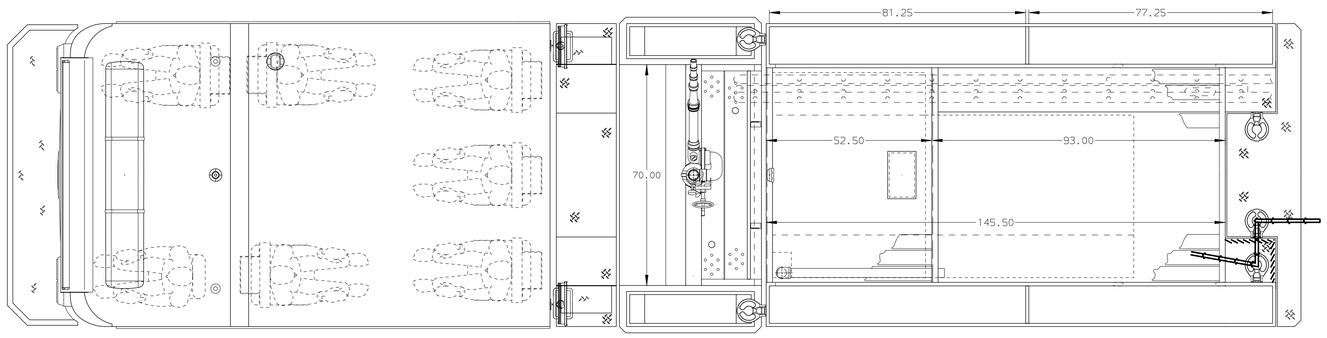

HOSEBED CAPACITY

BED 1
300' OF 2.50" D.J. POLY HOSE

BED 2
1500' OF 5.00" D.J. POLY HOSE

BED 3
300' OF 2.50" D.J. POLY HOSE

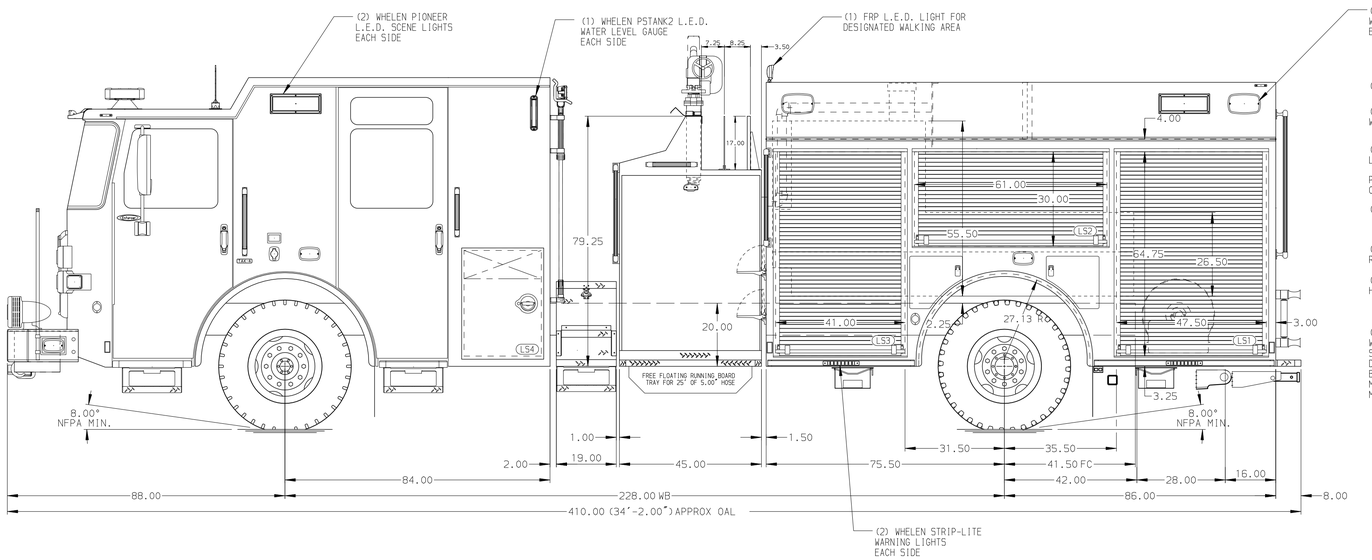

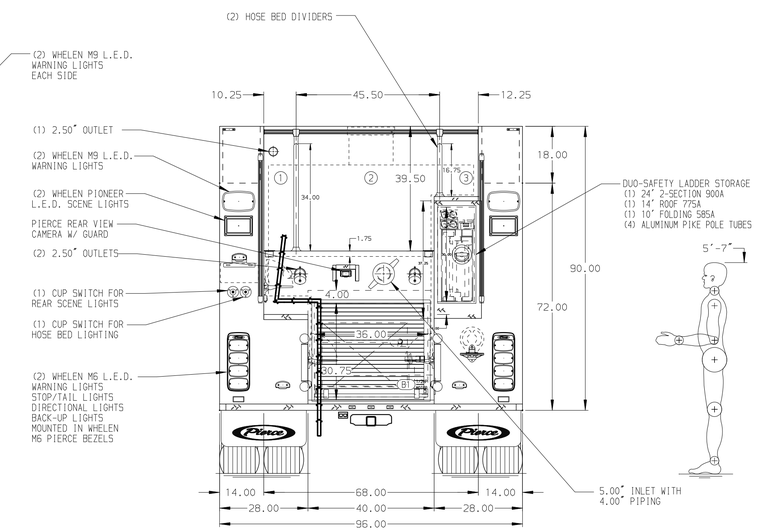

NOTE

DIMENSIONS SHOWN ARE APPROXIMATE AND ARE SUBJECT TO MINOR DEVIATIONS AS MAY OCCUR OR BE NECESSARY IN CONSTRUCTION.
MINOR DETAILS NOT SHOWN.

1. ONE 2.50 OUTLET WITH 2.50 PIPING AND SWIVEL LOCATED IN CENTER BUMPER TRAY
2. SHORELINE RECEPTACLE WITH KUSSMAUL SUPER AUTO-EJECT LOCATED ON DRIVER SIDE OF THE CAB
3. AIR INLET/OUTLET WITH DISCONNECT COUPLING ON DRIVER SIDE PUMP PANEL
4. BATTERY CHARGER LOCATED BEHIND DRIVER'S SEAT
5. BATTERY CHARGE INDICATOR LOCATED ON THE DRIVER SIDE OF THE CAB
6. EIGHT ADJUSTABLE SHELVES LOCATED PER SHOP ORDER
7. FOUR FLOOR MOUNTED SLIDE-OUT TRAYS LOCATED PER SHOP ORDER
8. TWO SWING-OUT TOOLBOARDS LOCATED PER SHOP ORDER
9. HANNAY BOOSTER REEL MODEL EF34-23-24 WITH CAPACITY FOR 200' OF 1.00" BOOSTER HOSE LOCATED IN COMPARTMENT B1

REV	DATE	BY	CH
2	08OCT24	JJB	DTJ
1	30AUG24	JJB	CSH

CHASSIS DATA
MAKE: PIERCE
MODEL: ENFORCER

Pierce MANUFACTURING INC.

TITLE: Pierce Pumper Approval Drawing
–
FOR: Yaphank Fire District
–
DWG NO.: 40266AD

JOB NO.	40266
SCALE	1:24
DATE	
DRAWN BY	JJB 24JUN24
CHECKED BY	MMF 24JUN24
SHEET SIZE	D
SHEET NO.	1 OF 1

View File Created 09-OCT-2024 13:33:15