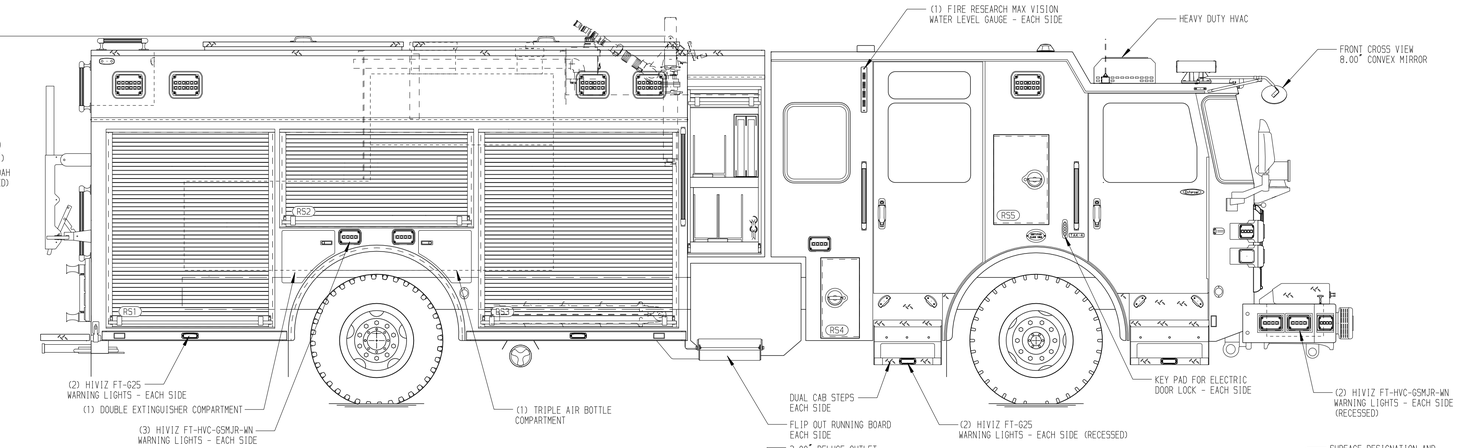

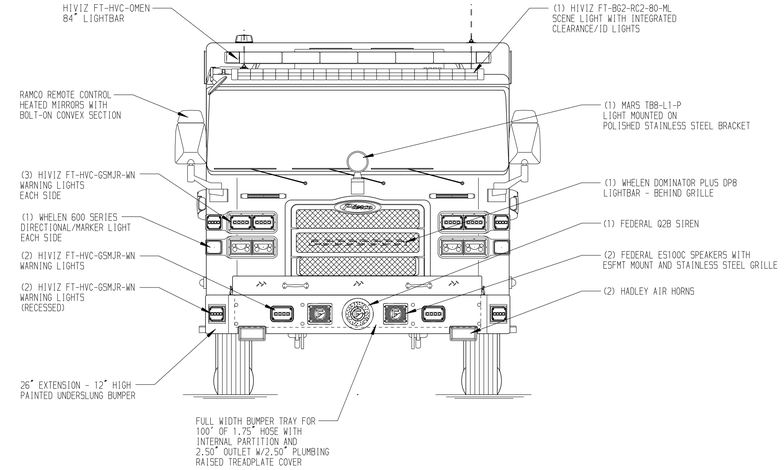

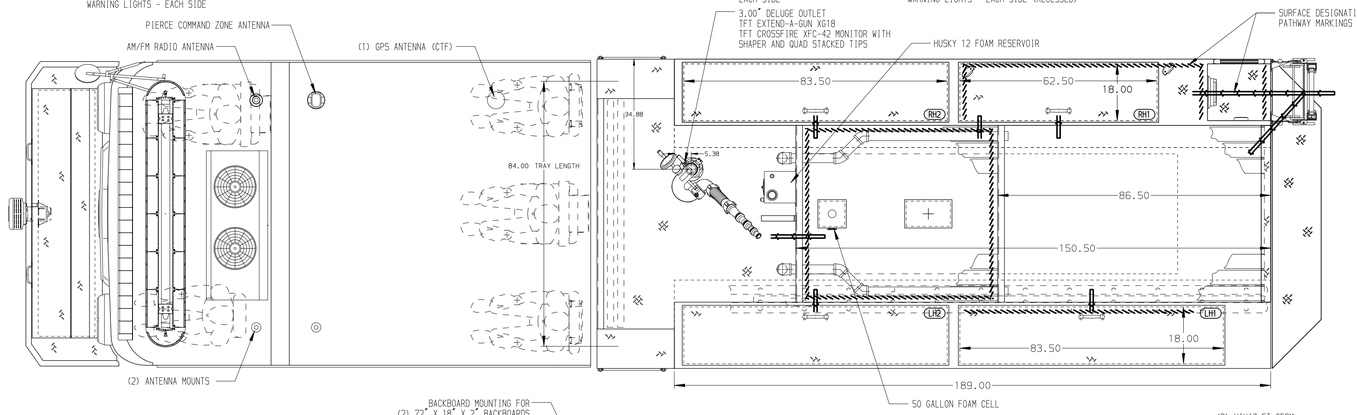

HOSEBED CAPACITIES

1 - 200' OF 2.50" DJP HOSE
2 - 950' OF 5.00" DJP HOSE
3 - 900' OF 3.00" DJP HOSE
4 - 200' OF 3.00" DJP HOSE

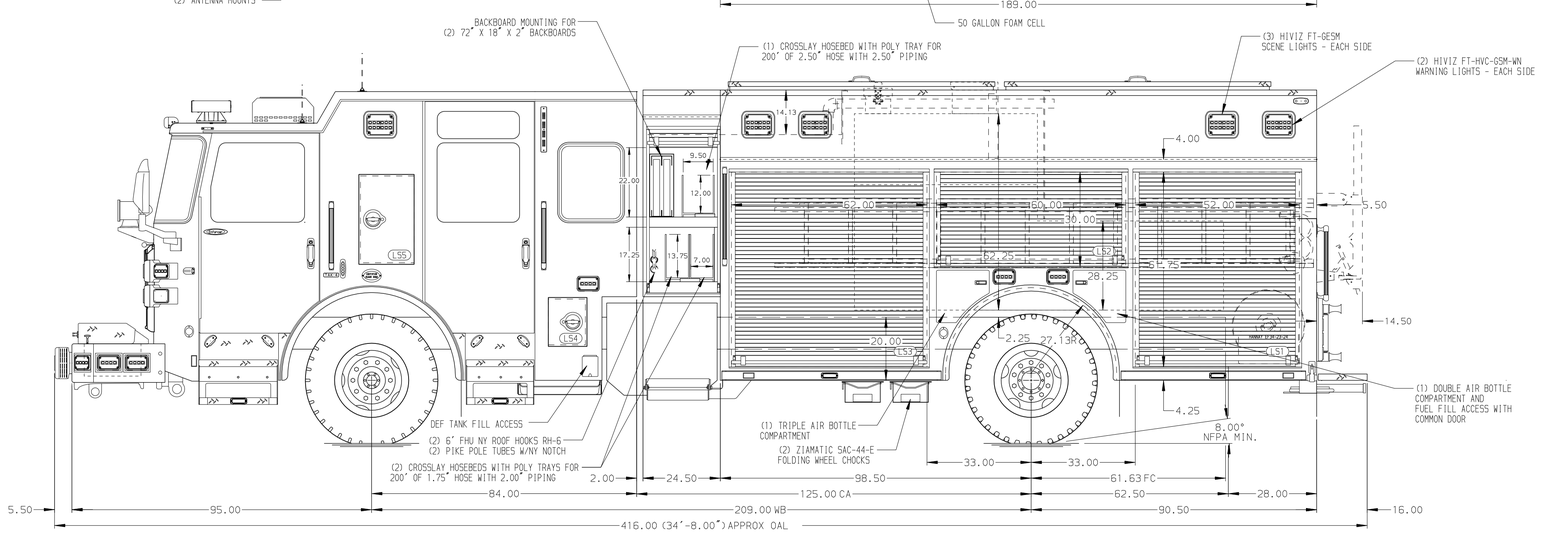

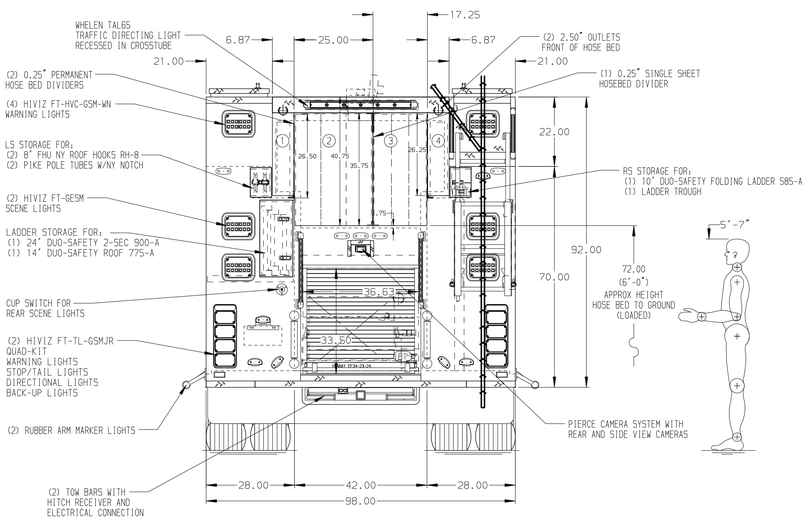

ALUMINUM BODY

MAXIMUM OAH 120.00"

SIDE ROLL AND FRONTAL IMPACT PROTECTION

AIR RIDE REAR SUSPENSION

NOTE

DIMENSIONS SHOWN ARE APPROXIMATE AND ARE SUBJECT TO MINOR DEVIATIONS AS MAY OCCUR OR BE NECESSARY IN CONSTRUCTION.
MINOR DETAILS NOT SHOWN.

1. ONSPOT AUTOMATIC TIRE CHAINS TO BE PROVIDED AT REAR
2. AIR INLET WITH DISCONNECT COUPLING LOCATED AT DRIVER'S SEAT RISER
3. AIR OUTLET WITH SHUT OFF VALVE LOCATED AT DRIVER'S SIDE PUMP PANEL
4. CHARGER LOCATED ON BACK WALL OF EMS CABINET BEHIND DRIVER'S SEAT
5. BATTERY CHARGE INDICATOR LOCATED ON DRIVER'S SEAT RISER
6. XANTREX INVERTER LOCATED BEHIND DRIVER'S SEAT
7. 20A/120V STRAIGHT BLADE NEMA 5-20 SHORELINE RECEPTACLE LOCATED ON DRIVER'S SEAT RISER
8. HANNAY BOOSTER HOSE REEL MODEL EF34-23-24 WITH CAPACITY FOR 200' OF 1.00" BOOSTER HOSE LOCATED IN COMPARTMENT B1

REV	DATE	BY	CH
V	230CT25	SAM	KLH
V	230CT25	SAM	KLH
V	07JUL25	SAM	PHA

CHASSIS DATA — MAKE: PIERCE — MODEL: ENFORCER

Pierce MANUFACTURING INC.

TITLE: 2000GPM, 800G TANK, 750G WATER, 50G FOAM 189" PUC, MUX

FOR: ZONETON FIRE PROTECTION DISTRICT SHEPHERDSVILLE, KENTUCKY

DWG NO.: 40282AD-SH1

JOB NO.	SCALE	DRAWN BY	CHECKED BY	SHEET SIZE	SHEET NO.
40282	1:24	SAM	PHA	D	1 OF 2

DATE: 24JUN25 24JUN25

View File Created 24-OCT-2025 07:11:07