RIGHT SIDE COMPARTMENTS CONTAIN THE FOLLOWING:

COMPARTMENT RS1 CONTAINS:
- (1) STD DEPTH ADJ SHELF
- (1) VERTICAL COMPARTMENT DIVIDER
- (2) STD DEPTH ADJ SLIDE OUT TRAYS
- (3) STD DEPTH SLIDE OUT TRAYS WITH TOOLBOARDS
-
-
-

COMPARTMENT RS2 CONTAINS:
- (3) 2-WAY SLIDE OUT TRAYS W/TOOLBOARDS
-
-
-

COMPARTMENT RS3 CONTAINS:
- (1) 1/2 DEPTH ADJ SLIDE OUT/TILT TRAY
- (1) HORIZONTAL FLOOR EXTENSION
- (2) 3-DRAWER C-TECH CABINETS
- (3) POLY TOOL BOXES
- (1) ELECTRIC CORD REEL WITH 150' OF 10/4 YELLOW CORD
-
-

COMPARTMENT RS4 CONTAINS:
- (1) STOKES BASKET RACK
- (1) RACK FOR 3 BACKBOARDS
- (1) RACK FOR SKEDCO TRIPOD
- (1) 1/2 DEPTH ADJ SHELF
- (1) HORIZONTAL FLOOR EXTENSION
- (1) 2-WAY FLOOR MTD SLIDEMASTER TRAY
- (1) VERTICAL COMPARTMENT DIVIDER
- (1) 3/4 DEPTH FLOOR MOUNTED SLIDE OUT TRAY WITH TOOLBOARD

COMPARTMENT RS5 CONTAINS:
- (1) PIKE POLE
- (1) FIRE HOOKS EXTINGUISHER MOUNT
-

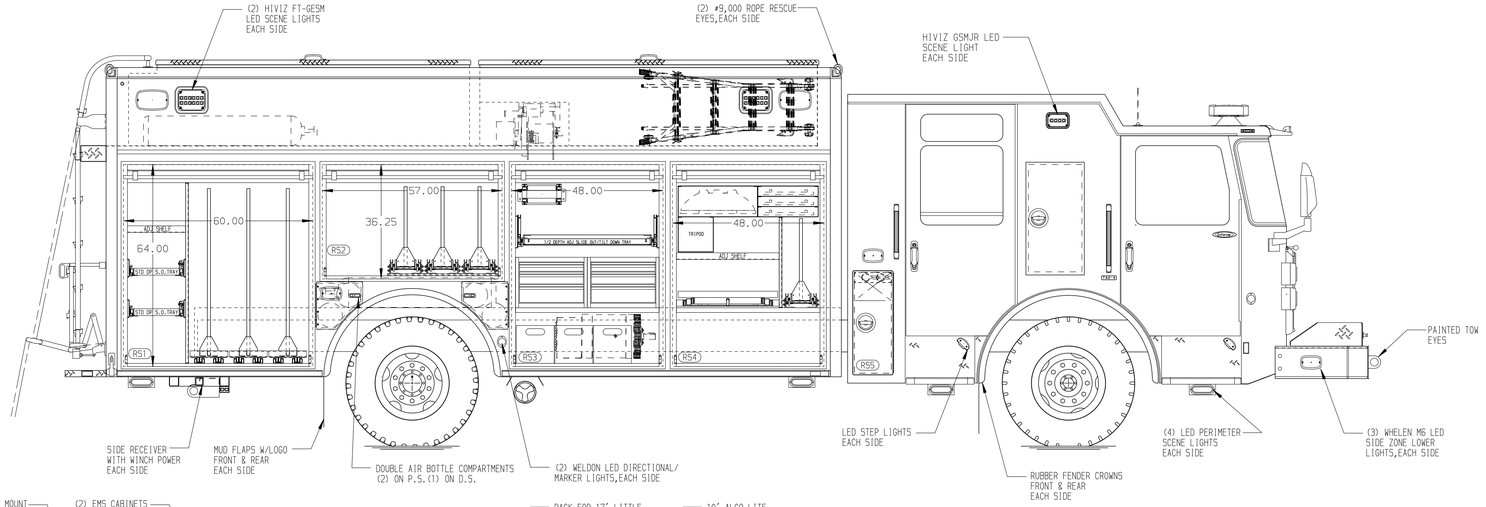

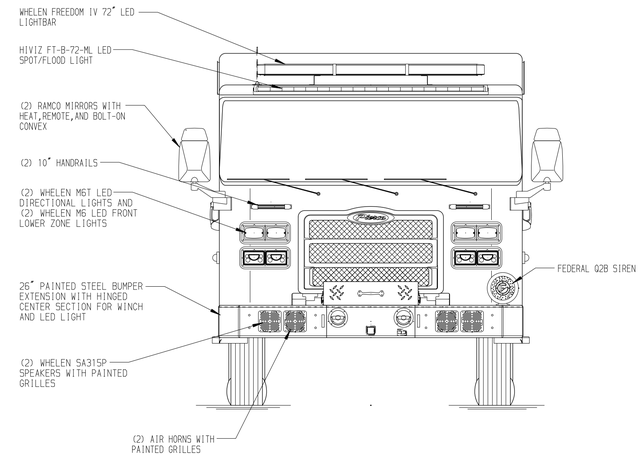

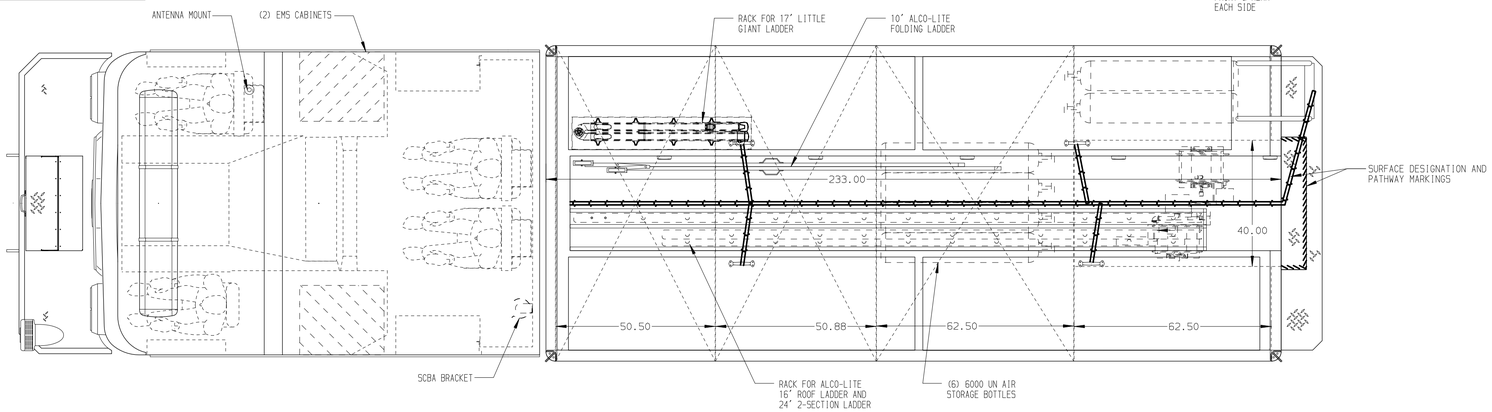

REAR COMPARTMENT CONTAINS THE FOLLOWING:

COMPARTMENT B1 CONTAINS:
- (1) ELECTRIC CORD REEL WITH 150' OF 10/4 YELLOW CORD
- (1) 30A,240V T.L. RECEPTACLE
- (1) LOW PRESSURE AIR REEL W/200' OF HOSE
- (1) 60"DP ADJ SLIDE OUT TRAY
-
-
-

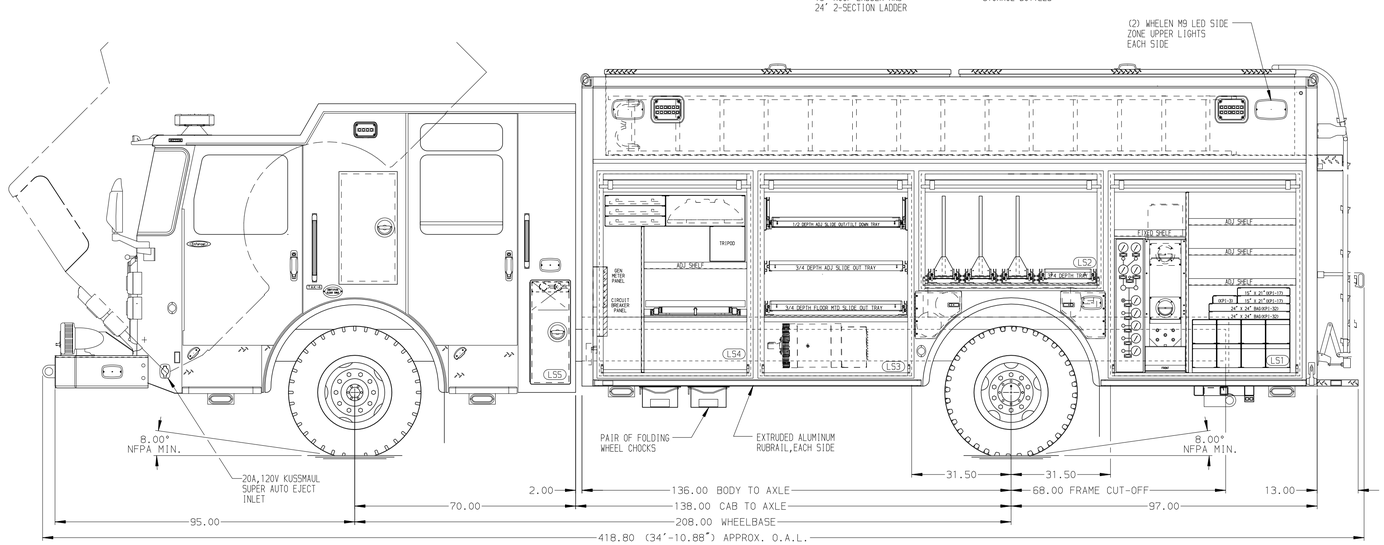

LEFT SIDE COMPARTMENTS CONTAIN THE FOLLOWING:

COMPARTMENT LS1 CONTAINS:
- (1) RACK FOR 5 AIR BAGS
- (1) RACK FOR 8 SCBA BOTTLES
- (1) STD DEPTH FIXED SHELF
- (1) CASCADE SYSTEM CONTROL PANEL
- (1) "SPACESAVER"2-BOTTLE FILL ENCLOSURE
- (3) STD DEPTH ADJ SHELVES
-
-

COMPARTMENT LS2 CONTAINS:
- (3) 2-WAY SLIDE OUT TRAYS W/TOOLBOARDS
- (1) 3/4 DEPTH FLOOR MTD SLIDE OUT TRAY
-
-
-

COMPARTMENT LS3 CONTAINS:
- (1) 3/4 DEPTH ADJ SLIDE OUT TRAY
- (1) 1/2 DEPTH ADJ SLIDE OUT/TILT TRAY
- (1) HORIZONTAL FLOOR EXTENSION
- (1) 3/4 DEPTH FLOOR MTD SLIDE OUT TRAY
-
-
-

COMPARTMENT LS4 CONTAINS:
- (1) STOKES BASKET RACK
- (1) RACK FOR 3 BACKBOARDS
- (1) RACK FOR SKEDCO TRIPOD
- (1) 1/2 DEPTH ADJ SHELF
- (1) HORIZONTAL FLOOR EXTENSION
- (1) 2-WAY FLOOR MTD SLIDEMASTER TRAY
- (1) CAB LIFT CONTROLLER
- 1" LIP ON COMPARTMENT FLOOR
- (1) VERTICAL COMPARTMENT DIVIDER
- (1) CIRCUIT BREAKER PANEL
- (1) GENERATOR METER PANEL
-

COMPARTMENT LS5 CONTAINS:
- (1) PIKE POLE
- (1) FIRE HOOKS EXTINGUISHER MOUNT
-

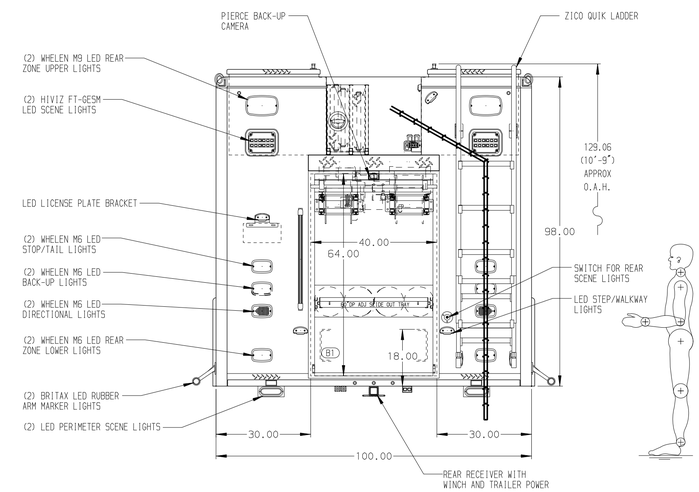

NOTE

DIMENSIONS SHOWN ARE APPROXIMATE AND ARE SUBJECT TO MINOR DEVIATIONS AS MAY OCCUR OR BE NECESSARY IN CONSTRUCTION.
MINOR DETAILS NOT SHOWN.

NOTES:
1. HARRISON 25Kw SINGLE PHASE PTO DRIVEN GENERATORE LOCATED BETWEEN THE FRAME RAILS.
2. WARN #10,000 PORTABLE RECEIVER STYLE WINCH
3. WINDOW PROTECTOR BARS ON CREW CAB DOORS
4. FLOOR IN CAB AND CREW CAB TO BE PADDED RUBBER
5. KUSSMAUL PUMP PLUS 1200 CHARGER LOCATED BEHIND THE DRIVER'S SEAT
6. BATTERY CHARGE INDICATOR LOCATED ON DRIVER'S SEAT RISER
7. PULL STRAPS ON ALL BODY ROLL-UP DOORS
8. PIERCE LED LIGHTS IN ALL BODY AND HATCH COMPARTMENTS
9. (2) PIKE POLES IN DRIVER'S SIDE FORWARD HATCH COMPARTMENT
10. 15/20A,120V DUPLEX RECEPTACLE IN PASSENGER'S SIDE EMS CABINET

CLEAR DOOR WIDTH KEY	
AMDOR ROLL UP DOORS:	-2 1/4"
GORTITE ROLL UP DOORS:	-2 1/2
PIERCE DOUBLE LAP DOORS:	-4 1/4"
PIERCE LIFT-UP LAP DOORS:	-1 1/2"
(EX: 60"F-F - 2 1/4"= 57 3/4" CLEAR) (F-F)= FRAME TO FRAME	

REV	DATE	BY	CH
7	14FEB25	DHE	AZU
8	21NOV24	DHE	AZU
9	13SEP24	DHE	AZU

CHASSIS DATA
MAKE: PIERCE
MODEL: EN7010

Pierce MANUFACTURING INC.

TITLE: HEAVY DUTY RESCUE NON-WALKIN
FOR: CITY OF MONROE BID #972
SIDDONS-MARTIN EMERGENCY GROUP LARRY FREEMAN
DWG NO.: 40297AD

JOB NO.	40297
SCALE 1:24	DATE
DRAWN BY DHE	21AUG24
CHECKED BY AZU	27JUN24
SHEET SIZE D	SHEET NO. 1 OF 1

View File Created 14-FEB-2025 09:43:27