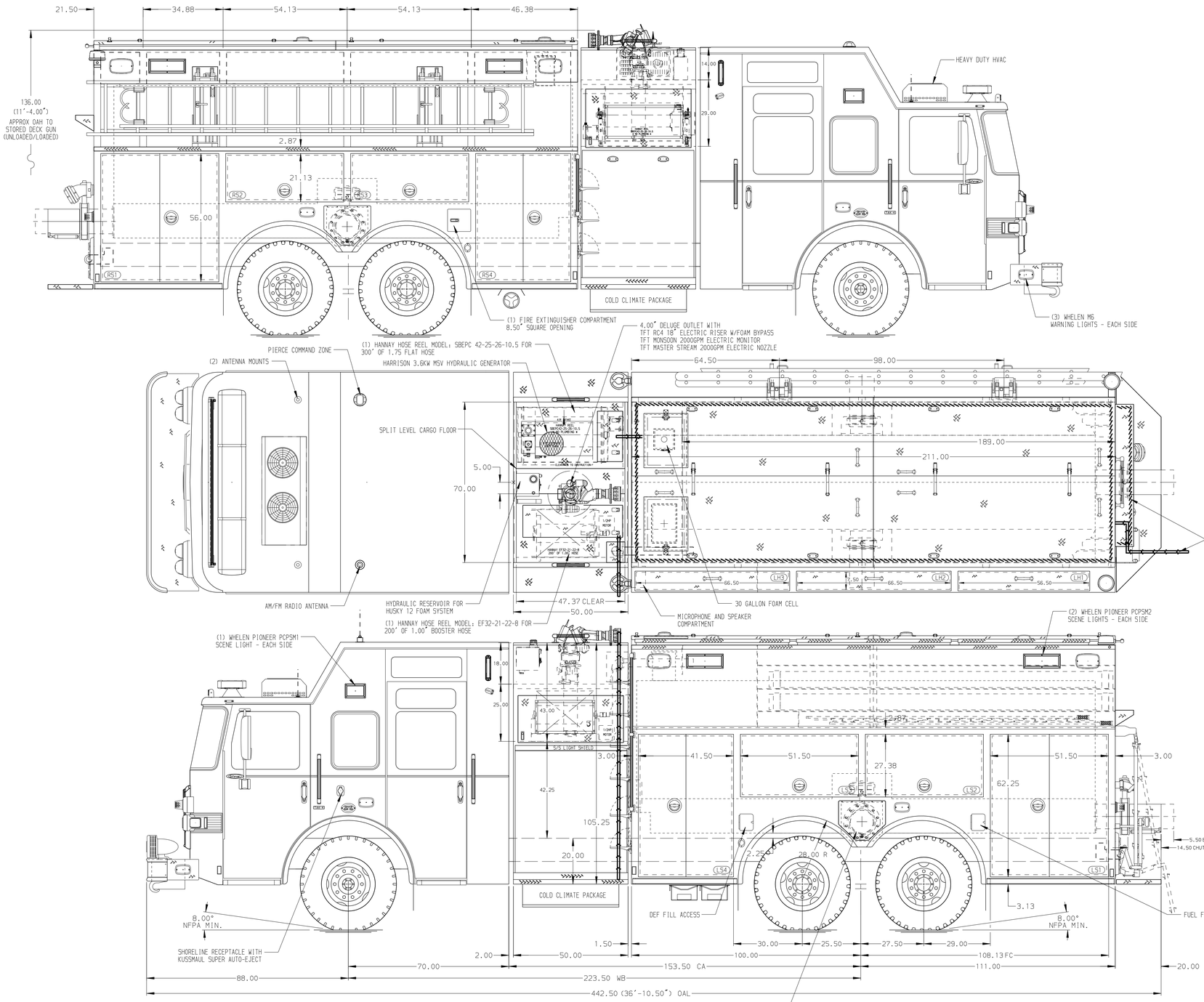

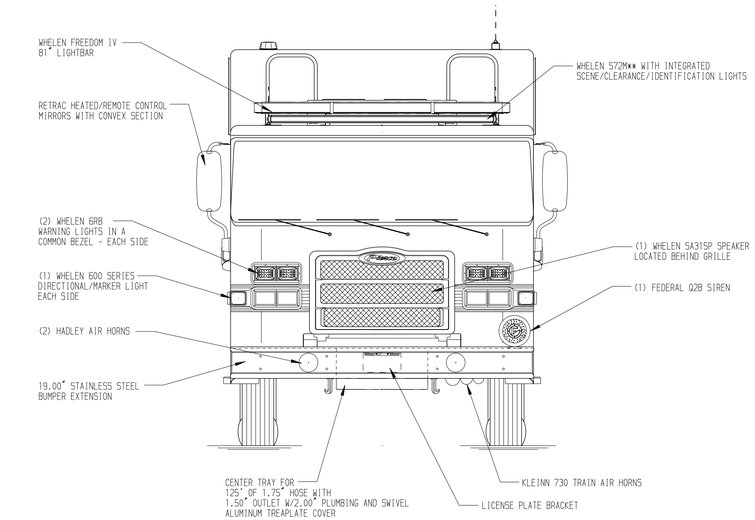

HOSEBED CAPACITIES

① - 300' OF 2.50" DJP HOSE
② - 1500' OF 4.00" LD HOSE

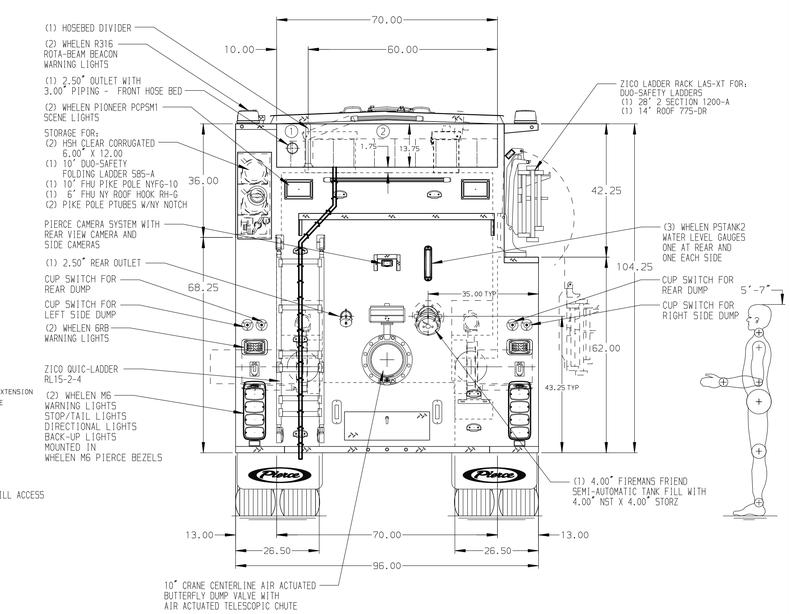

ALUMINUM BODY

FRONTAL IMPACT PROTECTION

NOTE

DIMENSIONS SHOWN ARE APPROXIMATE AND ARE SUBJECT TO MINOR DEVIATIONS AS MAY OCCUR OR BE NECESSARY IN CONSTRUCTION.
MINOR DETAILS NOT SHOWN.

1. ONSPOT AUTOMATIC TIRE CHAINS LOCATED AT REAR
2. AIR INLET WITH DISCONNECT COUPLING LOCATED AT DRIVER'S SIDE PUMP PANEL
3. BATTERY CHARGER LOCATED BEHIND DRIVER'S SEAT
4. BATTERY CHARGER INDICATOR LOCATED ON DRIVER'S SEAT RISER
5. CIRCUIT BREAKER PANEL LOCATED IN BODY COMPARTMENT PER ORDER
6. FOUR RECEPTACLES LOCATED IN BODY COMPARTMENTS PER ORDER

REV	DATE	BY	CH
V	29JAN26	SAM	PHA
V	15DEC25	PHA	PHA
V	12DEC25	SAM	SZE
V	22AUG25	SAM	SZE

CHASSIS DATA
MAKE PIERCE
MODEL ENFORCER

Pierce MANUFACTURING INC.

TITLE: 2000GPM, 3030G TANK, 3000G WATER, 30G FOAM 211" TANKER/PUMPER, MUX
FOR: WINHALL FIRE DEPARTMENT BONDVILLE, VERMONT
DWG NO.: 40305AD

JOB NO.	40305
SCALE	1:24
DATE	
DRAWN BY	SAM 18AUG25
CHECKED BY	PHA 19AUG25
SHEET SIZE	D
SHEET NO.	1 OF 1

View File Created 30-JAN-2026 11:59:29