RIGHT SIDE COMPARTMENTS CONTAIN THE FOLLOWING:

COMPARTMENT RS1 CONTAINS:
- (1) VERTICAL COMPARTMENT DIVIDER
- (2) STD DEPTH ADJ SLIDE OUT/TILT TRAYS
- (2) STD DEPTH ADJ SLIDE OUT TOOLBOARDS
-
-
-

COMPARTMENT RS2 CONTAINS:
- (1) STD DEPTH ADJ SLIDE OUT/TILT TRAY

COMPARTMENT RS3 CONTAINS:
- (2) STD DEPTH ADJ SHELVES
- CARGO RETENTION NETTING
-

COMPARTMENT RS4 CONTAINS:
- (1) STD DEPTH ADJ SHELF
- (1) FLOOR MOUNTED TRAY
- (1) STD DEPTH ADJ SLIDE OUT TRAY
- (1) 30A,240V T.L. RECEPTACLE

COMPARTMENT RS5 CONTAINS:
- (1) HORIZONTAL FLOOR EXTENSION
- (1) 1/2 DEPTH ADJ SLIDE OUT/TILT TRAY
- (4) 2-WAY FLOOR MOUNTED SLIDE OUT TRAYS WITH TOOLBOARDS AND GUIDES
- (1) FLOOR MOUNTED TRAY

COMPARTMENT RS6 CONTAINS:
- CHASSIS BATTERIES ON TRAY

COMPARTMENT RS7 CONTAINS:
- (1) 3/4 DEPTH FLOOR MTD SLIDE OUT TRAY
- STORAGE RACK WITH SIX TROUGHS
-

COMPARTMENT RS8 CONTAINS:
- (1) SPECIAL DEPTH ADJ SLIDE OUT/TILT TRAY
- (1) RACK FOR 2 PIKE POLES

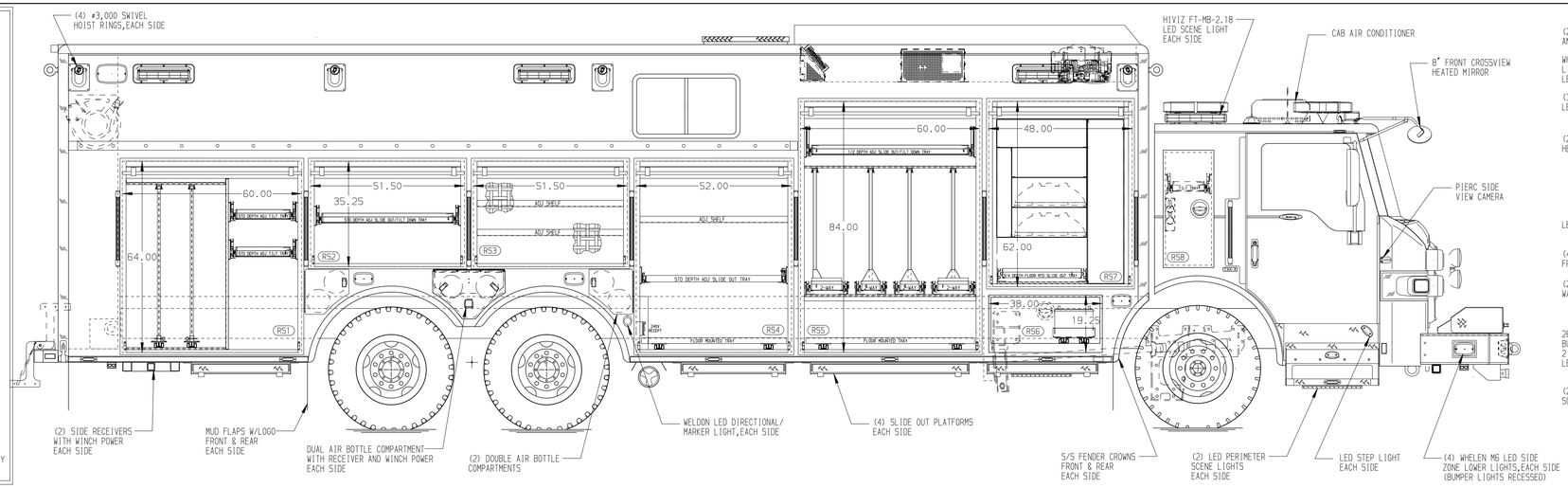

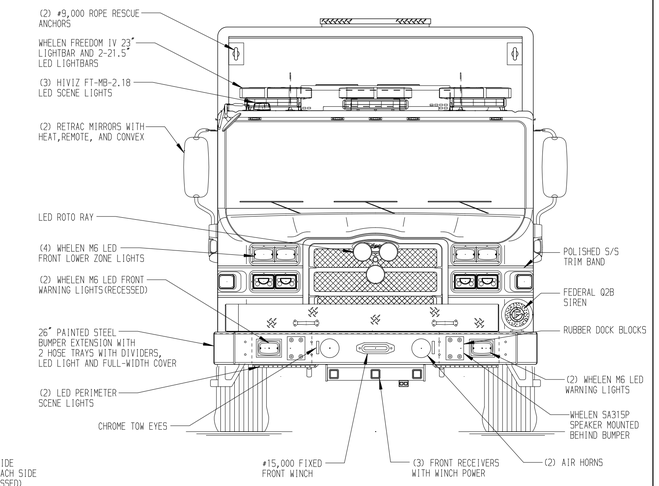

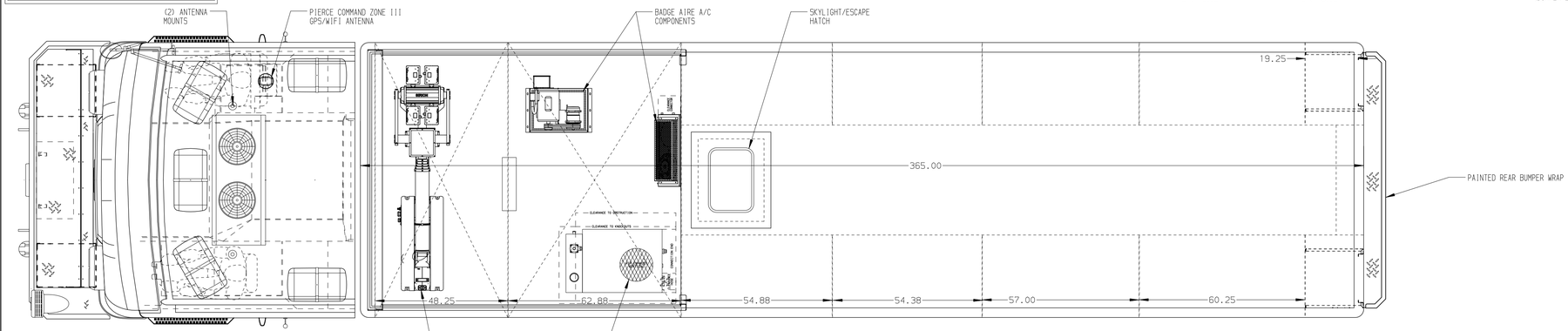

REAR COMPARTMENTS CONTAINS THE FOLLOWING:

COMPARTMENT B1 CONTAINS:
- (1) ELECTRIC CORD REEL W/200' OF 10/3 YELLOW CORD
- (1) FOLD-OUT ROLLER GUIDE BRACKET
- (2) SPECIAL DEPTH ADJ SHELVES
- (1) CIRCUIT BREAKER PANEL
- (1) GENERATOR METER PANEL

COMPARTMENT B2 CONTAINS:
- (1) ELECTRIC CORD REEL W/200' OF 10/3 YELLOW CORD
- (1) FOLD-OUT ROLLER GUIDE BRACKET
- (1) SPECIAL DEPTH ADJ SHELF
- (1) TRAFFIC CONE MOUNTING POST

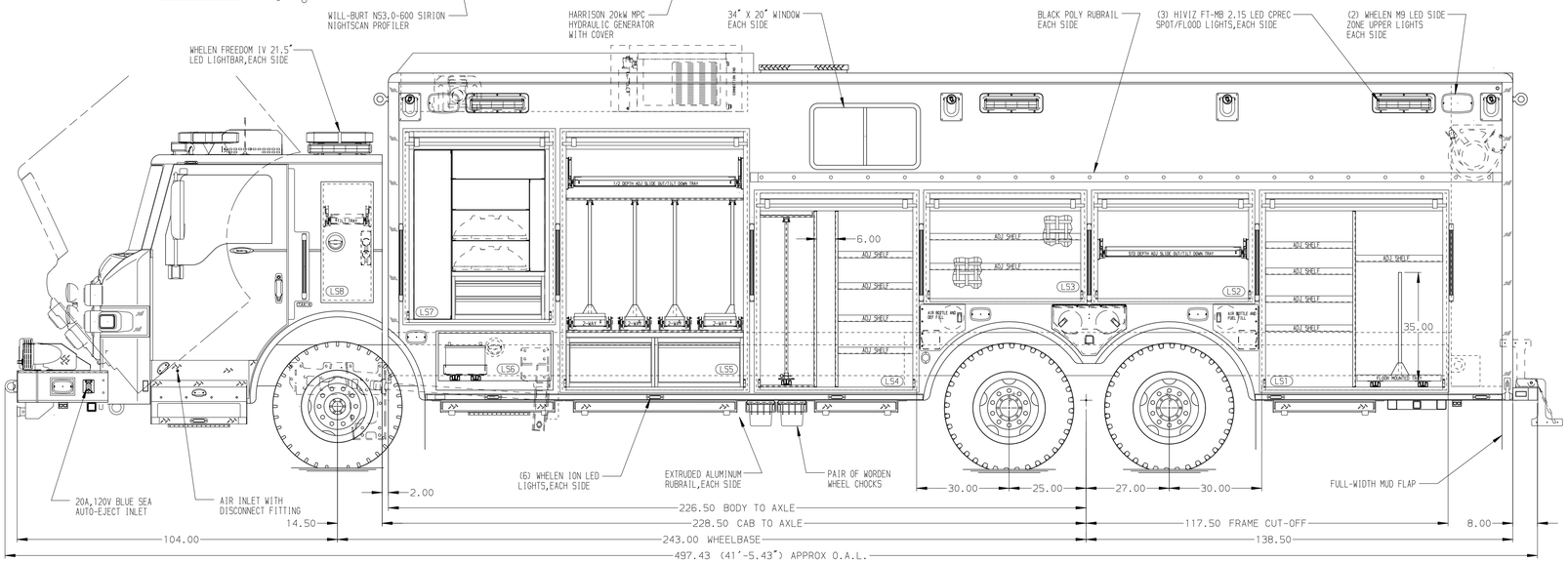

LEFT SIDE COMPARTMENTS CONTAIN THE FOLLOWING:

COMPARTMENT LS1 CONTAINS:
- (5) STD DEPTH ADJ SHELVES
- (1) FLOOR MOUNTED TRAY WITH TOOLBOARD
- (1) VERTICAL COMPARTMENT DIVIDER
-

COMPARTMENT LS2 CONTAINS:
- (1) STD DEPTH ADJ SLIDE OUT/TILT TRAY

COMPARTMENT LS3 CONTAINS:
- (2) STD DEPTH ADJ SHELVES
- CARGO RETENTION NETTING
-

COMPARTMENT LS4 CONTAINS:
- (1) STD DEPTH ADJ SLIDE OUT TOOLBOARD
- (2) VERTICAL COMPARTMENT DIVIDERS WITH VELCRO STRAP
- (4) STD DEPTH ADJ SHELVES

COMPARTMENT LS5 CONTAINS:
- (1) HORIZONTAL FLOOR EXTENSION
- (1) 1/2 DEPTH ADJ SLIDE OUT/TILT TRAY
- (4) 2-WAY FLOOR MOUNTED SLIDE OUT TRAYS WITH TOOLBOARDS AND GUIDES
- (2) C-TECH CABINETS
-
-

COMPARTMENT LS6 CONTAINS:
- CHASSIS BATTERIES ON TRAY
- (1) LIGHT TOWER CONTROLLER

COMPARTMENT LS7 CONTAINS:
- (1) 2-DRAWER C-TECH CABINET
- STORAGE RACK WITH SIX TROUGHS

COMPARTMENT LS8 CONTAINS:
- (1) SPECIAL DEPTH ADJ SLIDE OUT/TILT TRAY
- (1) RACK FOR 2 PIKE POLES

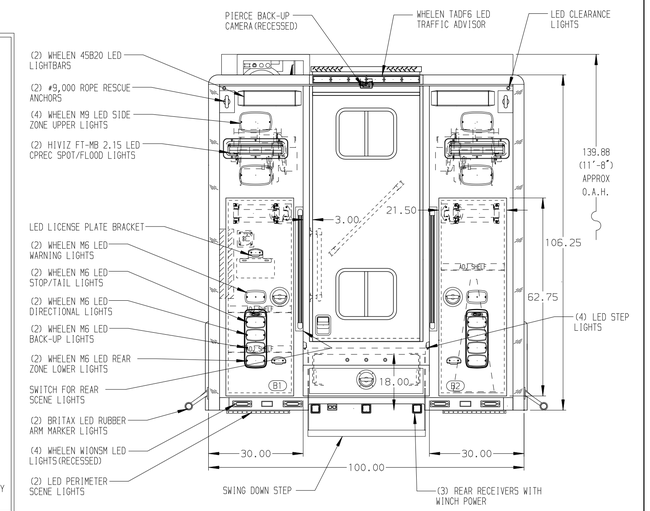

NOTE

DIMENSIONS SHOWN ARE APPROXIMATE AND ARE SUBJECT TO MINOR DEVIATIONS AS MAY OCCUR OR BE NECESSARY IN CONSTRUCTION.
MINOR DETAILS NOT SHOWN.

NOTES:
1. ONSPOT AUTOMATIC TIRE CHAINS
2. POLISHED S/S SCUFFPLATES ON CAB DOORS AND HANDRAILS
3. FLOOR IN CAB TO BE ALUMINUM TREADPLATE
4. KUSSMAUL CHIEF CHARGER LOCATED BEHIND DRIVER'S SEAT
5. BATTERY CHARGE INDICATOR LOCATED ON DRIVER'S SEAT WITH BRACKET
6. BRUSHED S/S ON FRONT AND REAR BODY CORNERS
7. S/S GUARDS ON ALL BODY ROLL-UP DOORS
8. PULL STRAPS ON ALL BODY ROLL-UP DOORS
9. BRUSHED S/S SCUFFPLATES ON DOOR AND DOOR FRAME IN CAB COMPARTMENTS AND B1 & B2
10. AMDOR LED LIGHTS IN ALL BODY COMPARTMENTS

SIDE ROLL AND FRONTAL IMPACT PROTECTION

CLEAR DOOR WIDTH KEY

AMDOR ROLL UP DOORS:	-2 1/4"
GORITTE ROLL UP DOORS:	-2 1/2
PIERCE DOUBLE LAP DOORS:	-4 1/4"
PIERCE LIFT-UP LAP DOORS:	-1 1/2"

(EX: 60"F-F -2 1/4"= 57 3/4" CLEAR)
(F-F)= FRAME TO FRAME

REV	DATE	BY	CH
1	28APR25	DHE	AZU
2	28FEB25	DHE	AZU
3	24FEB25	DHE	AZU
4	090CT24	DHE	GFI

CHASSIS DATA
MAKE: PIERCE
MODEL: VX1500

Pierce MANUFACTURING INC.

TITLE: HEAVY DUTY RESCUE WALKIN/NON-WALKIN
FOR: AUGUSTA COUNTY FIRE AND RESCUE — BID #1183
ATLANTIC EMERGENCY SOLUTIONS — BOBBY ST.CLAIR
DWG NO.: 40308AD-SH1

JOB NO.	40308
SCALE	1:24
DATE	16SEP24
DRAWN BY	DHE
CHECKED BY	GFI
19SEP24	
SHEET SIZE	D
SHEET NO.	1 OF 1

View File Created 28-APR-2025 13:41:43