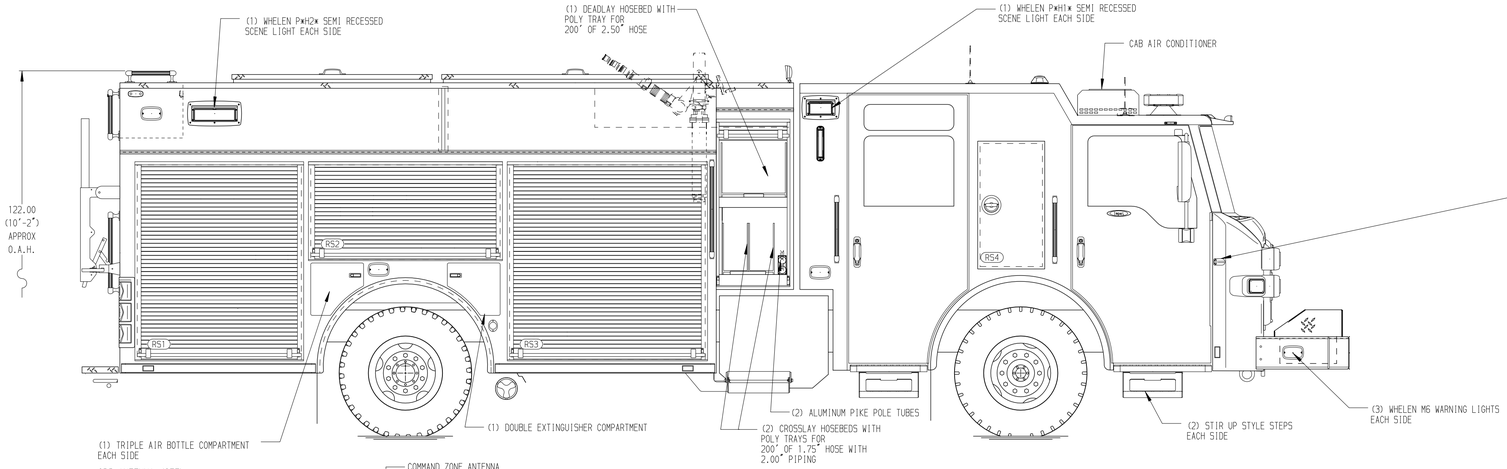

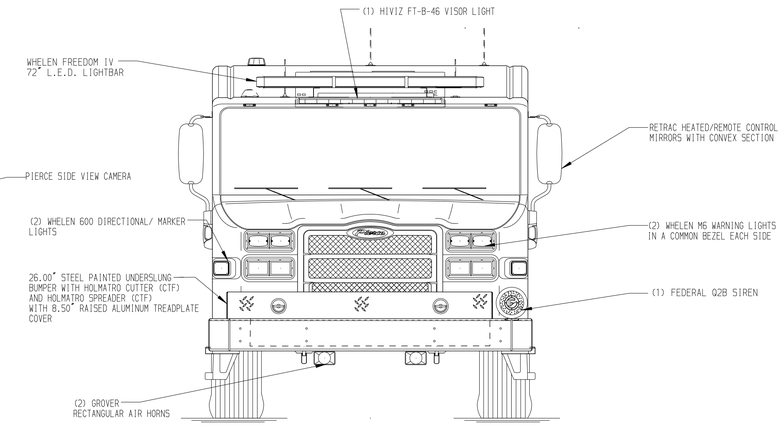

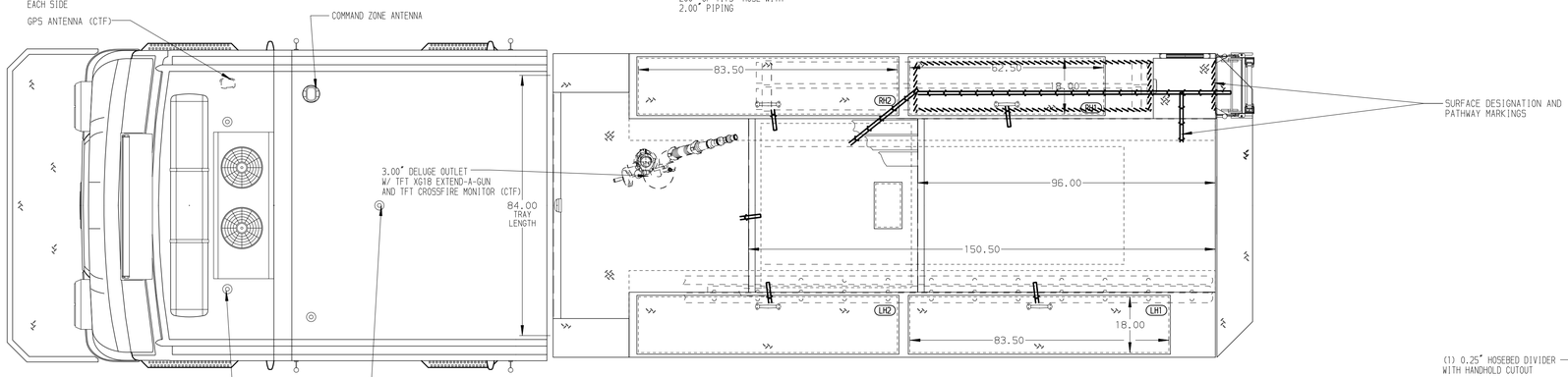

HOSEBED CAPACITIES

1 - 100' OF 1.75" D.J. POLY HOSE (ABOVE)
600' OF 2.50" D.J. POLY HOSE (BELOW)
2 - 1000' OF 5.00" D.J. POLY HOSE
3 - 200' OF 2.50" D.J. POLY HOSE

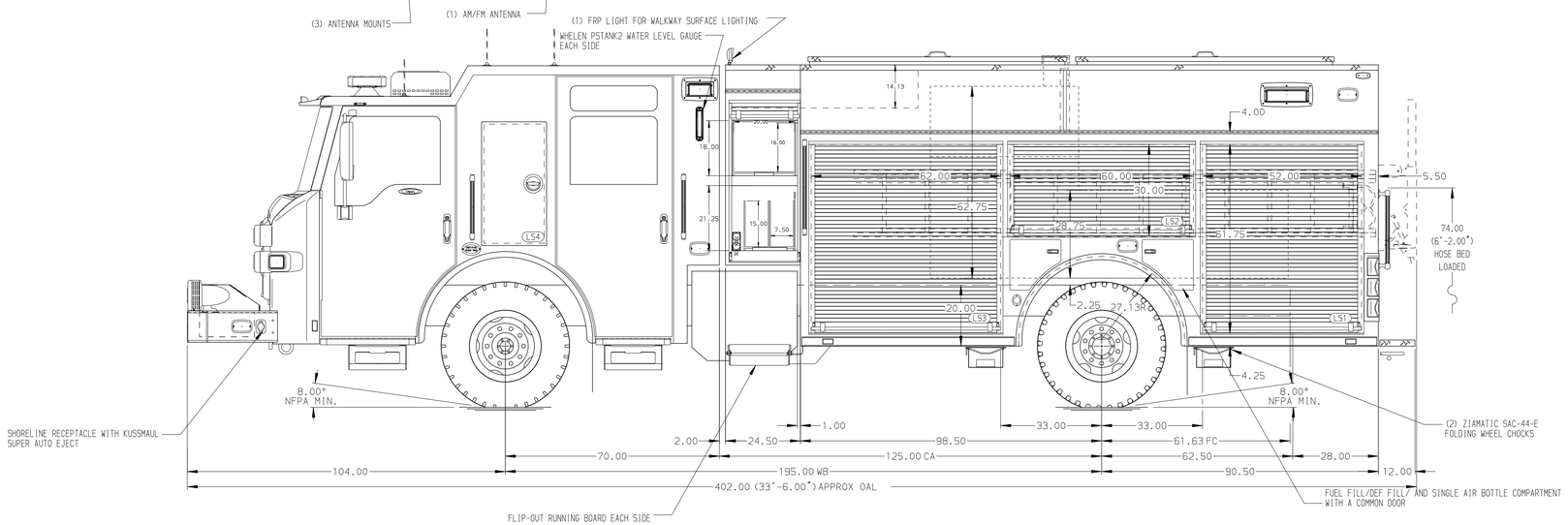

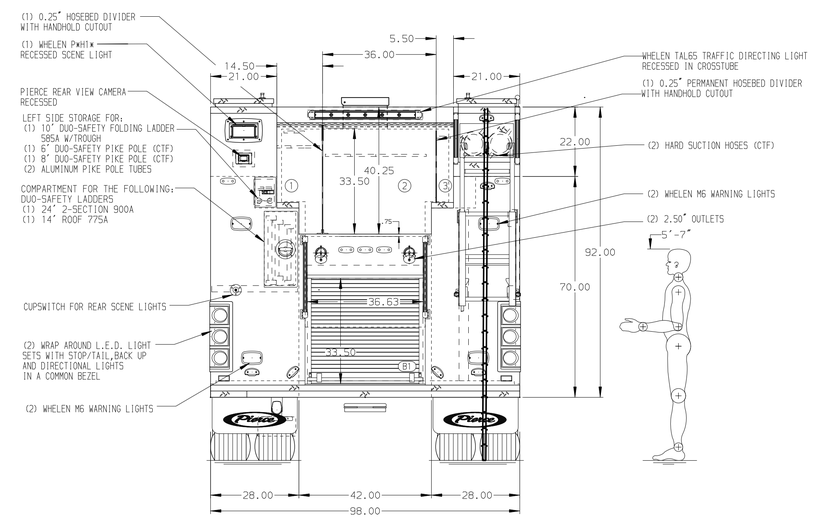

ALUMINUM BODY

SIDE ROLL AND FRONTAL IMPACT PROTECTION

NOTE

DIMENSIONS SHOWN ARE APPROXIMATE AND ARE SUBJECT TO MINOR DEVIATIONS AS MAY OCCUR OR BE NECESSARY IN CONSTRUCTION.
MINOR DETAILS NOT SHOWN.

1. BATTERY CHARGER LOCATED BEHIND THE DRIVER'S SEAT
2. BATTERY CHARGER INDICATOR ON THE DRIVER'STEPWELL

REV	DATE	BY	CH
V	28JAN26	LST	SJS
V	22DEC25	LST	SJS
V	18DEC25	LST	SJS

CHASSIS DATA: MAKE PIERCE; MODEL IMPEL FR

Pierce MANUFACTURING INC.

TITLE: 1500 GPM, 750 GAL WATERTANK 189" PUC BODY, IMPEL ESP ELECTRICAL SYSTEM

FOR: CARPENTERSVILLE FIRE DEPARTMENT CARPENTERSVILLE, ILLINOIS

DWG NO.: 40344AD

JOB NO.	40344
SCALE	1:24
DATE	
DRAWN BY	LST 05NOV25
CHECKED BY	IPR 7NOV25
SHEET SIZE	D
SHEET NO.	1 OF 1

View File Created 28-JAN-2026 11:11:48