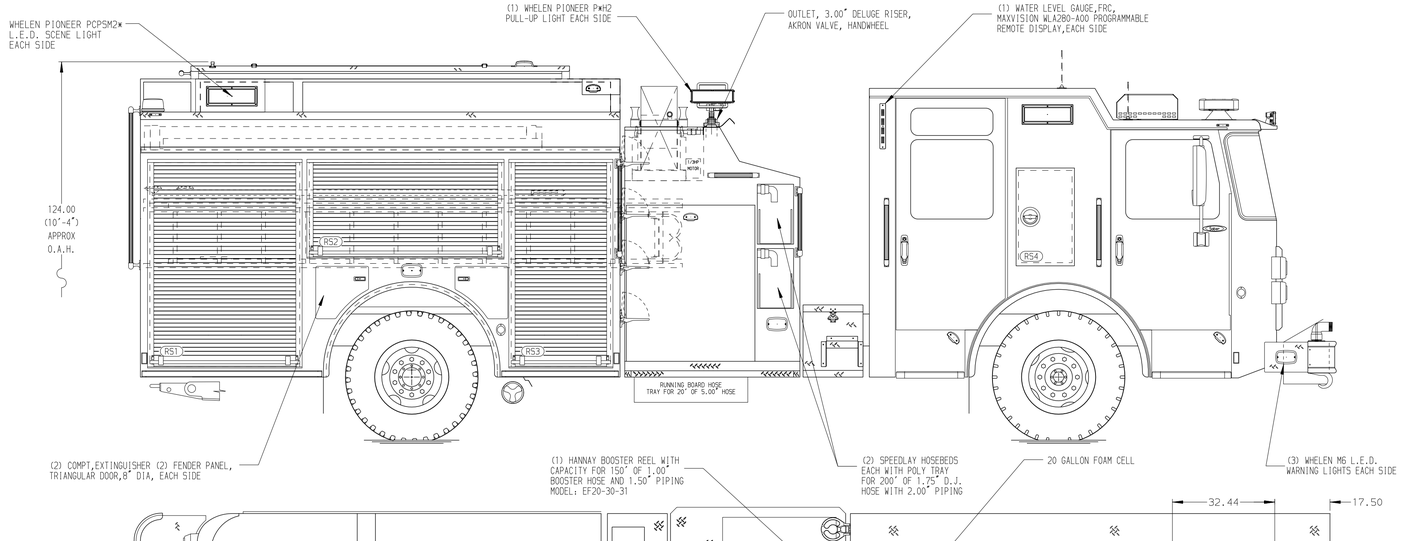

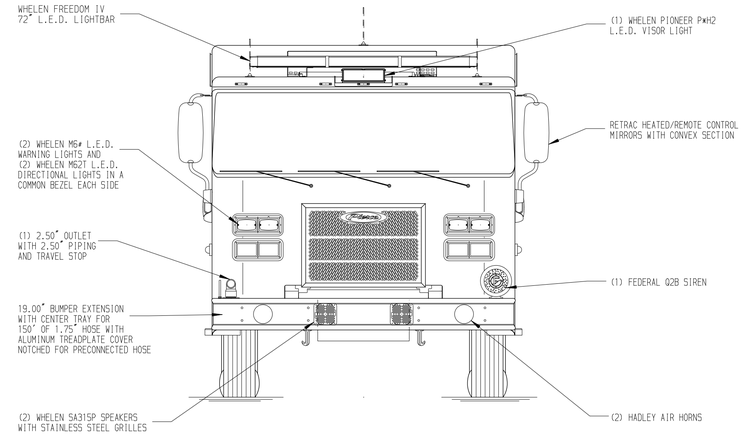

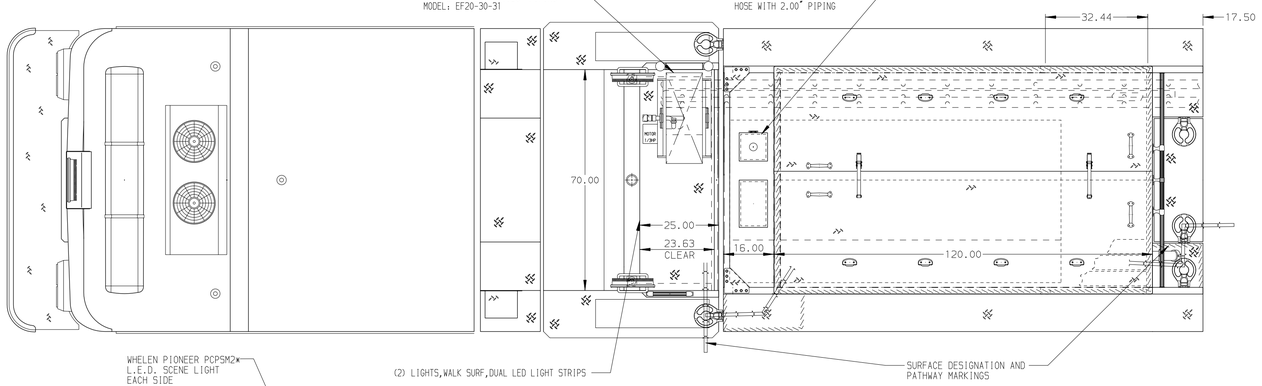

HOSEBED CAPACITIES

1 - 200' OF 2.50" D.J. POLY HOSE
2 - 1000' OF 5.00" D.J. POLY HOSE
3 - 500' OF 3.00" D.J. POLY HOSE

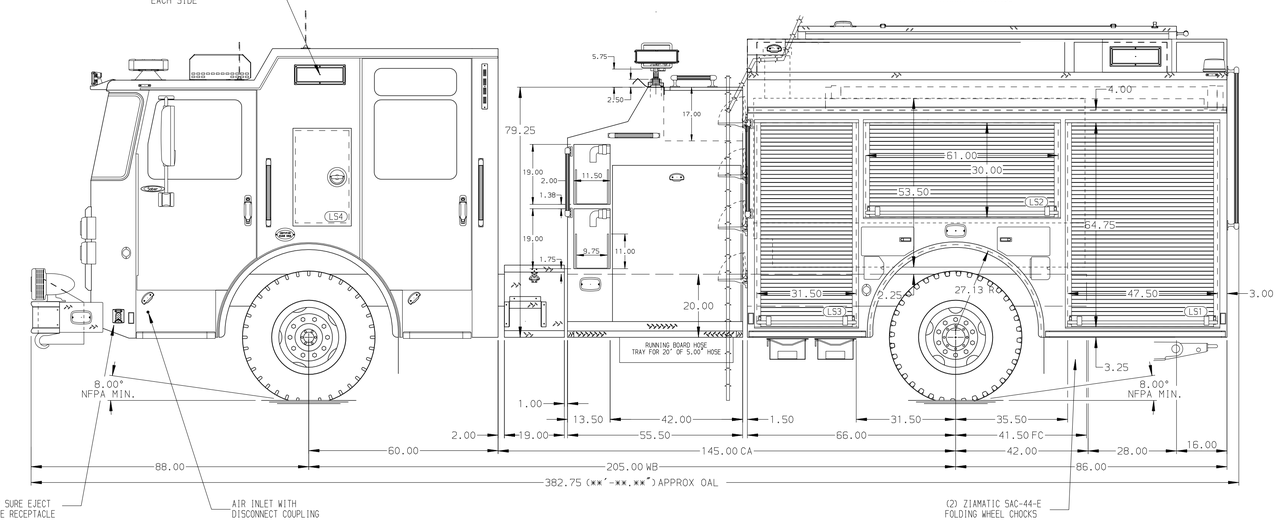

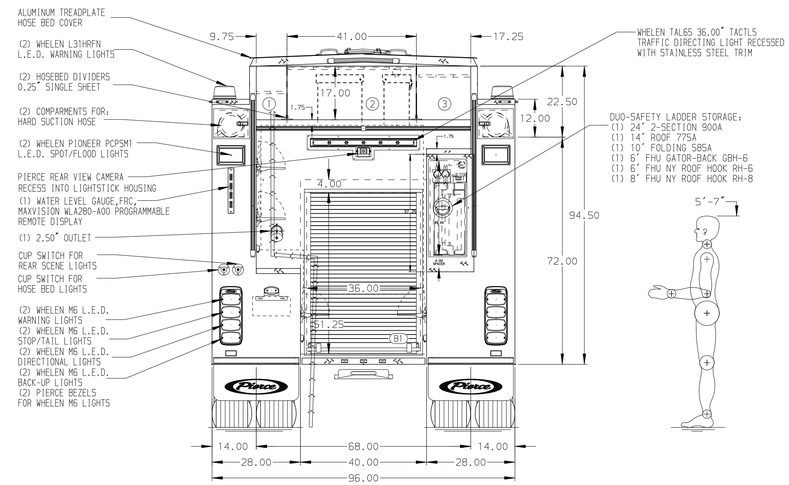

ALUMINUM BODY

SIDE ROLL AND FRONTAL IMPACT PROTECTION

NOTE

DIMENSIONS SHOWN ARE APPROXIMATE AND ARE SUBJECT TO MINOR DEVIATIONS AS MAY OCCUR OR BE NECESSARY IN CONSTRUCTION.
MINOR DETAILS NOT SHOWN.

REV	DATE	BY	CH
7	31JUL24	ADP	CCS
6	10JUN24	VHO	CCS
5	06JUN24	VHO	CCS

CHASSIS DATA
MAKE: PIERCE
MODEL: SABER FR

Pierce MANUFACTURING INC.

TITLE: 1500 GPM, 1020G TANK, 1000G WATER, 20G FOAM
152" 2G PUMPER, HARD WIRED

FOR: BRAZOS COUNTY PRECINCT 3 VOLUNTEER FIRE DEPARTMENT
BRYAN, TEXAS

DWG NO.: 40347AD

JOB NO.	40347
SCALE	1:24
DATE	
DRAWN BY	JJB
	12APR24
CHECKED BY	WKL
	12APR24
SHEET SIZE	D
SHEET NO.	1 OF 1

View File Created 31-JUL-2024 11:00:21