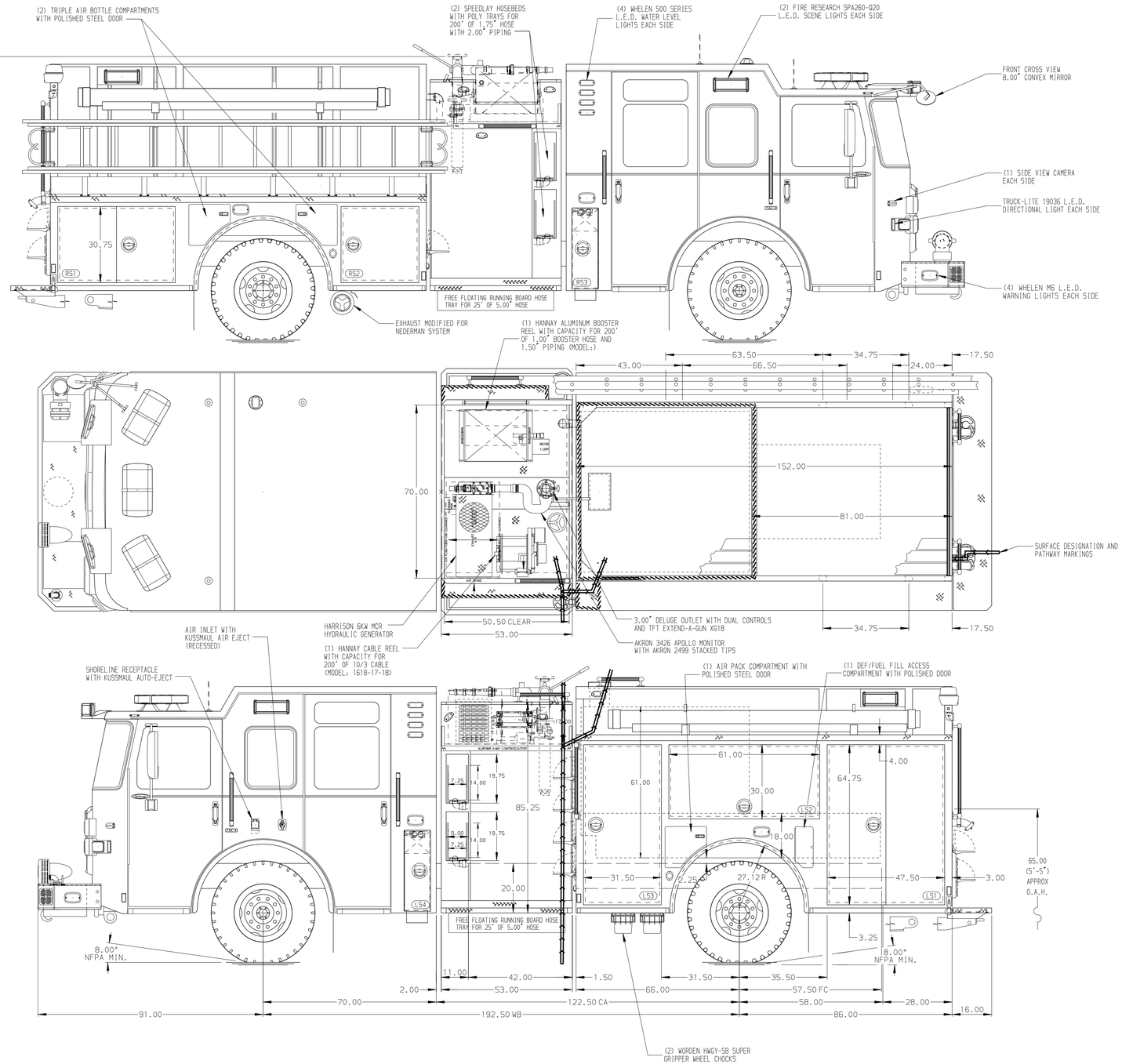

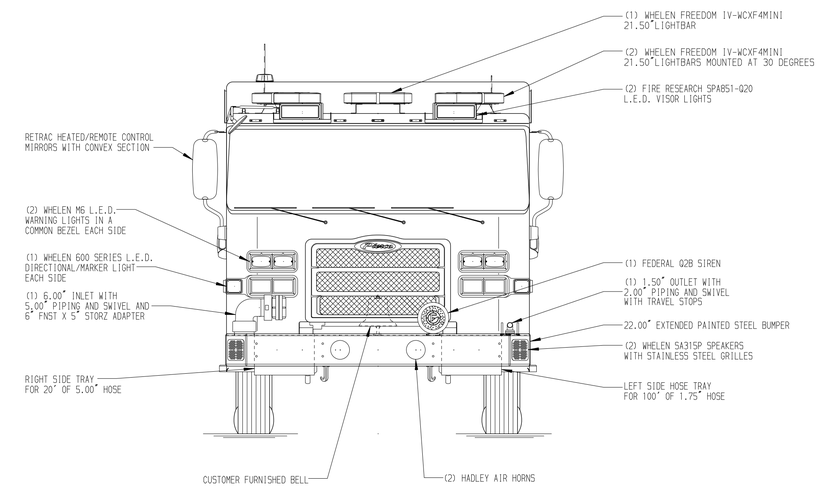

HOSEBED CAPACITIES

1. - 1000' OF 3.00" D.J. POLY HOSE
2. - 1000' OF 5.00" D.J. POLY HOSE
3. - 200' OF 2.50" D.J. POLY HOSE (IN BOTTOM TRAY)
4. - 200' OF 2.50" D.J. POLY HOSE (IN UPPER TRAY)

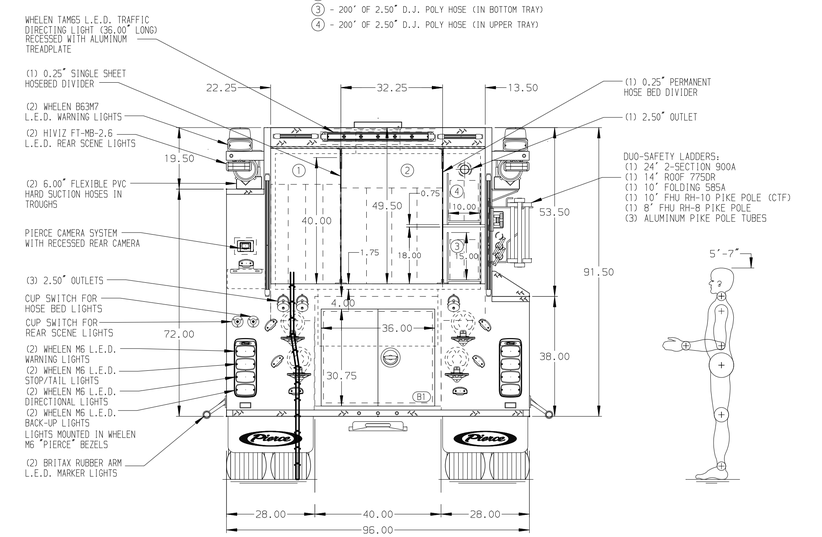

ALUMINUM BODY

SIDE ROLL AND FRONTAL IMPACT PROTECTION

NOTE

DIMENSIONS SHOWN ARE APPROXIMATE AND ARE SUBJECT TO MINOR DEVIATIONS AS MAY OCCUR OR BE NECESSARY IN CONSTRUCTION.
MINOR DETAILS NOT SHOWN.

1. (2) PIKE POLE TUBES LOCATED IN TRANSVERSE COMPARTMENT
2. BATTERY CHARGER LOCATED BEHIND DRIVER'S SEAT
3. BATTERY CHARGER INDICATOR LOCATED ON DRIVER'S SEAT RISER
4. DUAL L.E.D. LIGHT STRIPS LOCATED IN HOSE BED
5. L.E.D. LIGHT STRIP LOCATED ON THE FRONT OF THE HOSEBED
6. REVERSED HINGED DOOR ON COMPARTMENT LS3
7. ONE ADDITIONAL POLY TRAYS SHIPPED LOOSE
8. CIRCUIT BREAKER PANEL IN COMPARTMENT LS3
9. SEVEN 15/20A 120V RECEPTACLES IN COMPARTMENTS PER ORDER

REV	DATE	BY	CH
7	14AUG25	BTH	COS
6	13JUN25	BTH	COS
5	24APR25	BTH	SZE

CHASSIS DATA
MAKE: PIERCE
MODEL: ENFORCER

Pierce MANUFACTURING INC.

TITLE: 2000GPM, 1000G WATER TANK 152" 2G PUMPER, MUX
FOR: MOORESTOWN FIRE DISTRICT #1 MOORESTOWN, NEW JERSEY
DWG NO.: 40361AD

JOB NO.	40361
SCALE	1:24
DATE	18APR25
DRAWN BY	BTH
CHECKED BY	SZE
SHEET SIZE	D
SHEET NO.	1 OF 1

View File Created 15-AUG-2025 12:23:16