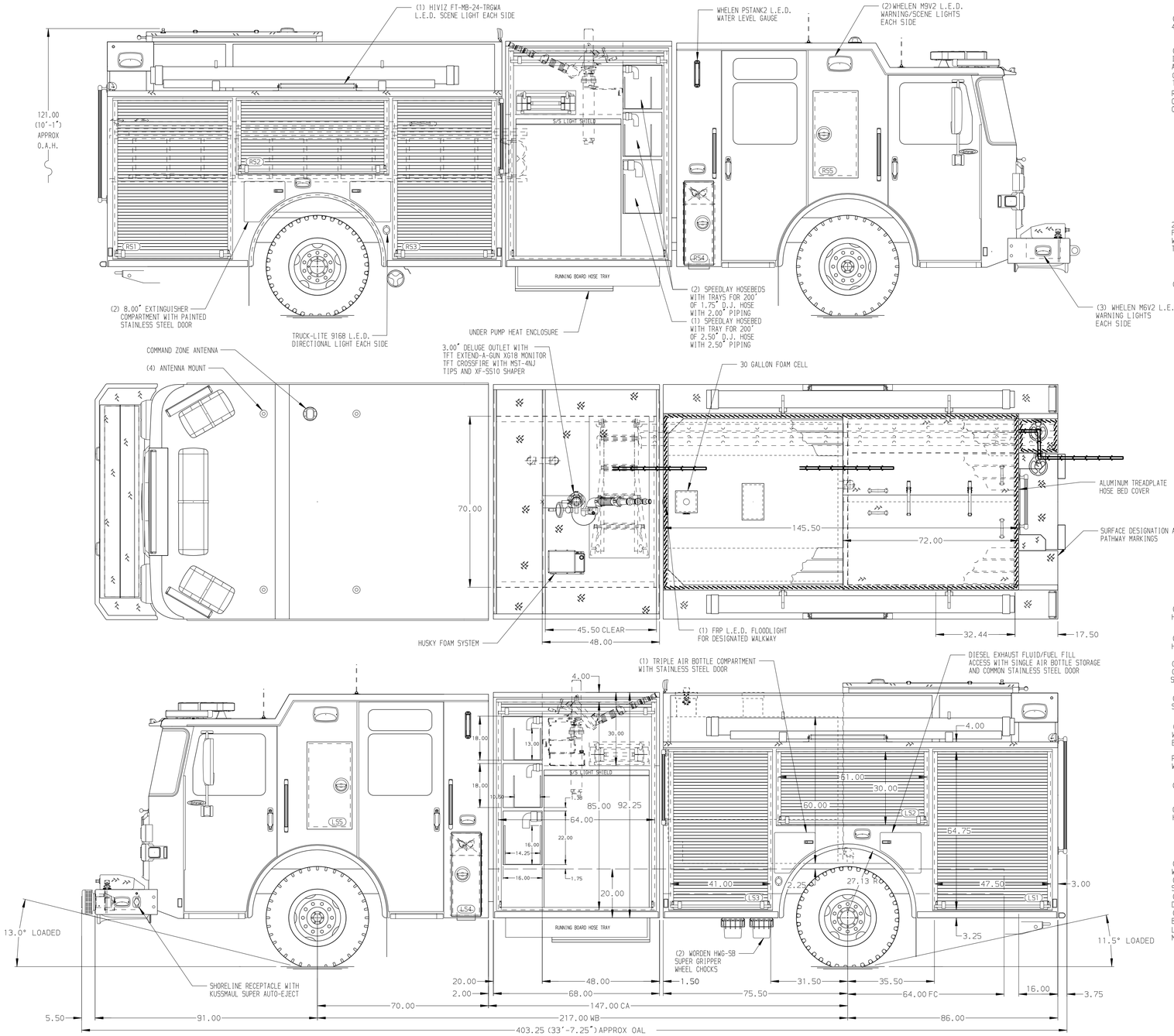

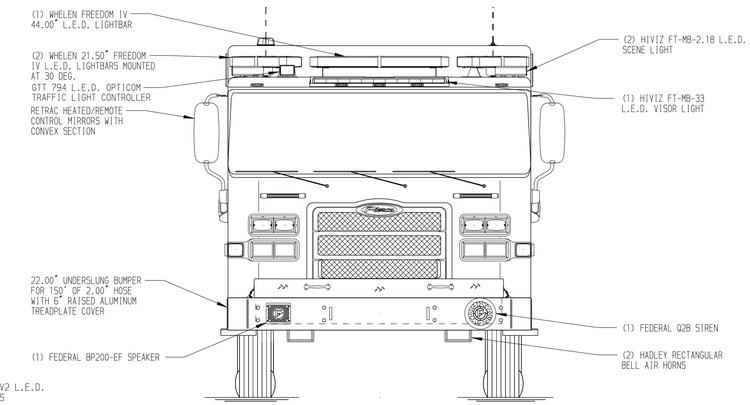

HOSEBED CAPACITIES

1. 200' OF 2.50" DJP HOSE W/TRAY
2. 300' OF 1.75" DJP HOSE W/TRAY
3. 500' OF 2.50" DJP HOSE
4. 1000' OF 5.00" DJP HOSE
5. 300' OF 2.50" DJP HOSE

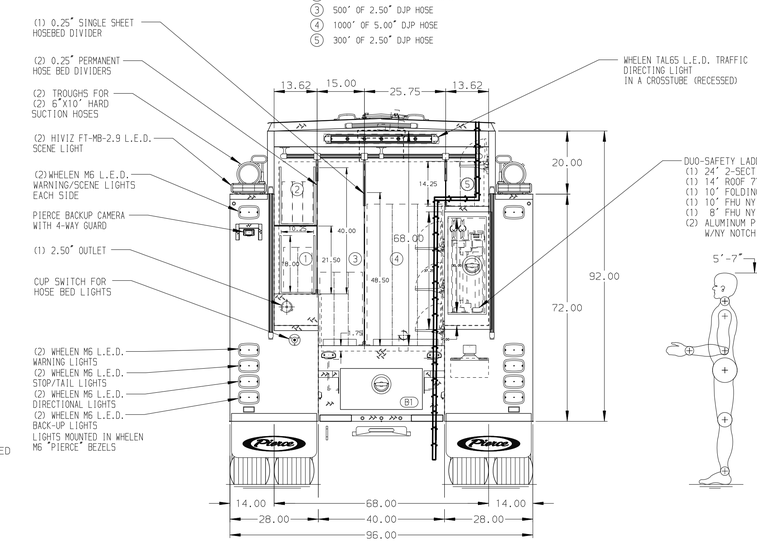

ALUMINUM BODY

SIDE ROLL AND FRONTAL IMPACT PROTECTION

NOTE

DIMENSIONS SHOWN ARE APPROXIMATE AND ARE SUBJECT TO MINOR DEVIATIONS AS MAY OCCUR OR BE NECESSARY IN CONSTRUCTION.
MINOR DETAILS NOT SHOWN.

1. KUSSMAUL AIR COMPRESSOR LOCATED BEHIND DRIVER'S SEAT
2. BATTERY CHARGER LOCATED BEHIND THE DRIVER'S SEAT
3. BATTERY CHARGER INDICATOR LOCATED ON DRIVER'S SEAT RISER
4. CTECH (4) DRAWER ASSEMBLY IN COMPARTMENT LS3
5. (2) PIKE POLE TUBES LOCATED IN TRANSVERSE COMPARTMENT
6. XANTREX FREEDOM X INVERTER 817-1000 PER SHOP ORDER
7. AIR INLET WITH DISCONNECT COUPLING IN THE DRIVER SIDE STEPWELL

REV	DATE	BY	CH
1	16JAN26	MPM	DTJ
2	02DEC25	JWR	DTJ
3	09OCT25	CDU	CDU

CHASSIS DATA
MAKE: PIERCE
MODEL: ENFORCER

Pierce MANUFACTURING INC.

TITLE: 2000 GPM, 780 TANK, 750 WATER, 30 FOAM
161" PUMPER, MUX

FOR: PLEASANT PRAIRIE FIRE & RESCUE
PLEASANT PRAIRIE, WISCONSIN

DWG NO. 40368AD

JOB NO.	40368
SCALE	1:24
DATE	
DRAWN BY	JWR
	30SEP25
CHECKED BY	CDU
	03OCT25
SHEET SIZE	D
SHEET NO.	1 OF 1

View File Created 23-JAN-2026 10:17:40