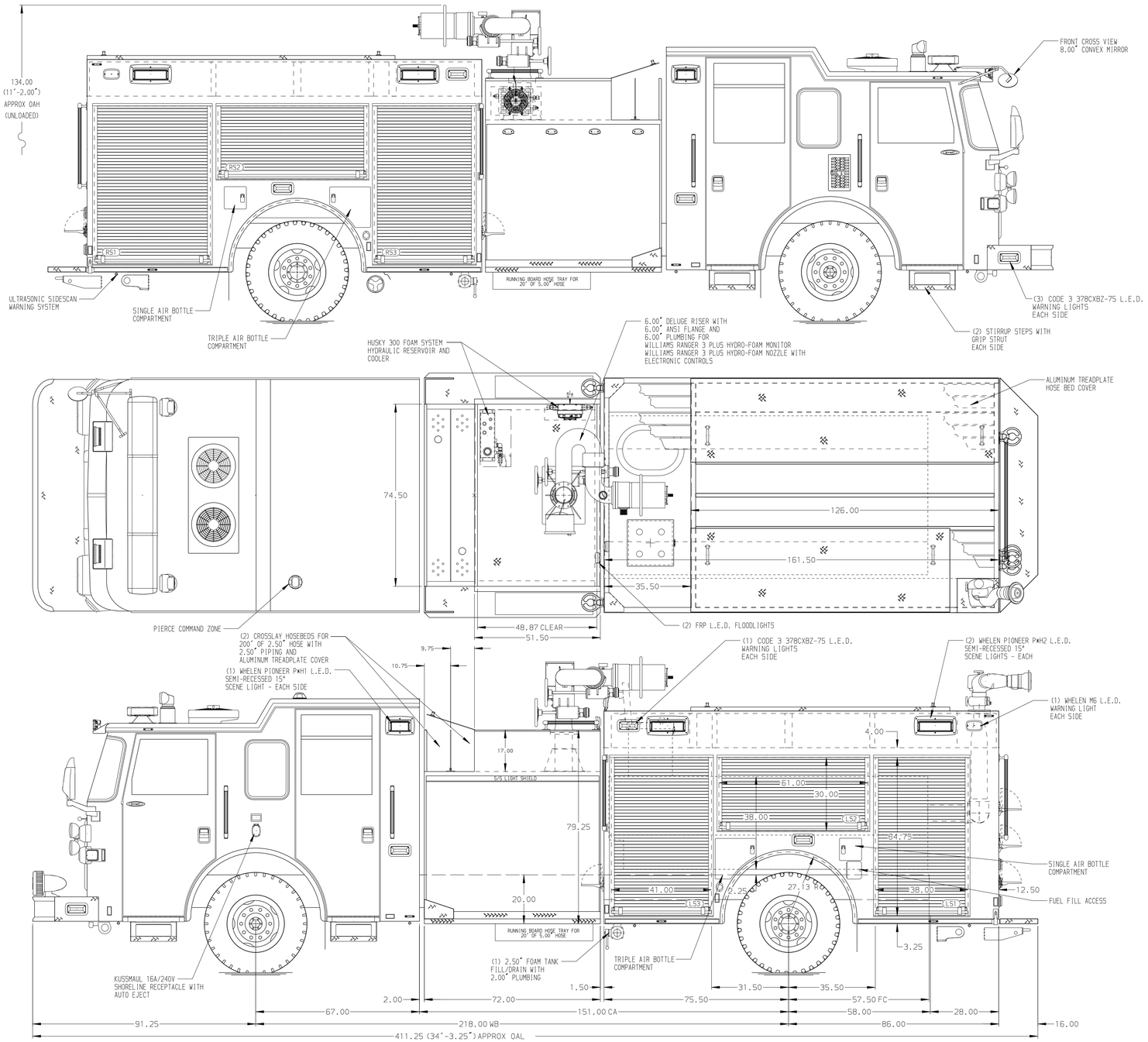

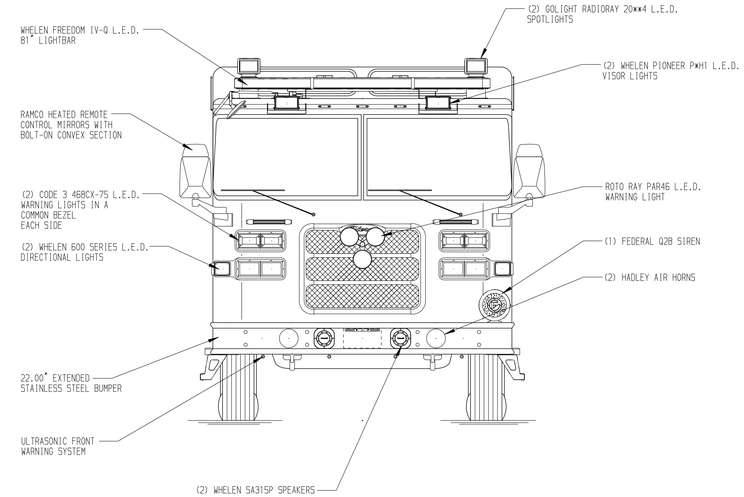

HOSEBED CAPACITIES

① - 230' OF 6.00" DJP HOSE

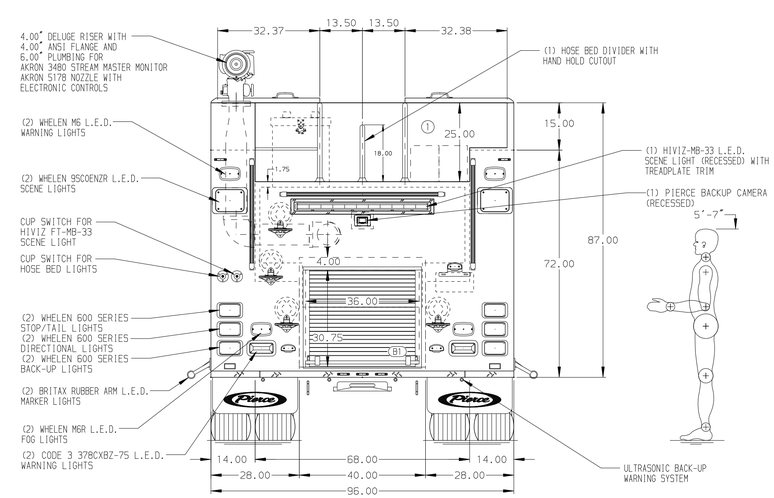

ALUMINUM BODY

NOTE

DIMENSIONS SHOWN ARE APPROXIMATE AND ARE SUBJECT TO MINOR DEVIATIONS AS MAY OCCUR OR BE NECESSARY IN CONSTRUCTION.
MINOR DETAILS NOT SHOWN.

1. DEF TANK LOCATED IN LS3 PER ORDER
2. AIR INLET WITH KUSSMAUL AIR EJECT LOCATED IN DRIVER'S SIDE STEP WELL
3. BATTERY CHARGER LOCATED IN BODY COMPARTMENT PER ORDER
4. SHORELINE BATTERY STATUS INDICATOR LOCATED ABOVE SHORELINE

REV	DATE	BY	CH
5	15SEP25	SAM	PHA
4	18JUN25	SAM	PHA
3	10DEC24	SAM	PHA
2	06NOV24	SAM	PHA
1	20SEP24	SAM	PHA

CHASSIS DATA
MAKE: PIERCE
MODEL: ARROW XT

Pierce MANUFACTURING INC.

TITLE: 3000GPM, 1000G TANK, OG WATER, 1000G FOAM
161" INDUSTRIAL PUMPER, MUX

FOR: SK CORP
ULSAN, SOUTH KOREA

DWG NO. 40393AD

JOB NO.	40393
SCALE	1:24
DATE	
DRAWN BY	SAM 10SEP24
CHECKED BY	PHA 12SEP24
SHEET SIZE	D
SHEET NO.	1 OF 1

View File Created 15-SEP-2025 10:27:35