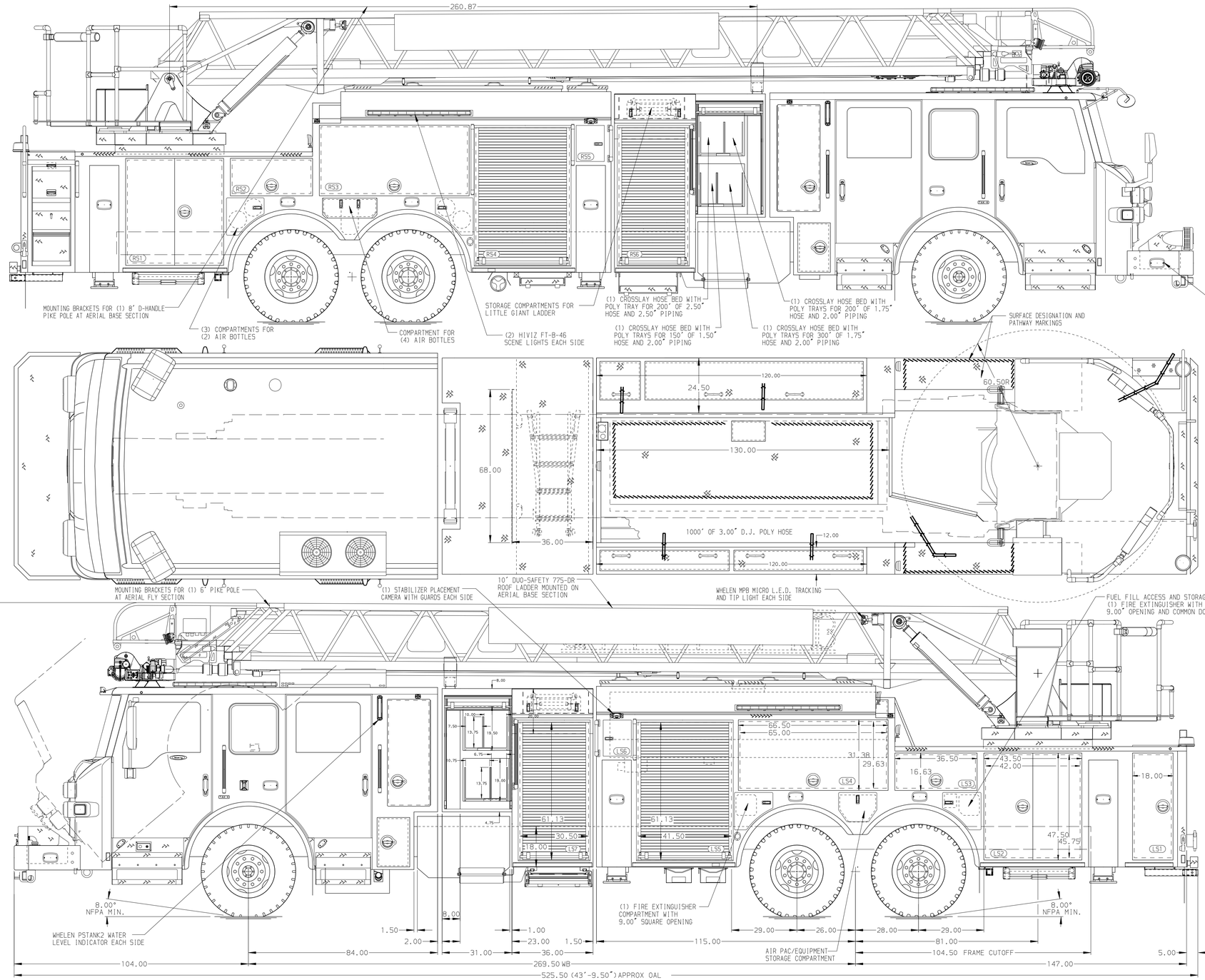

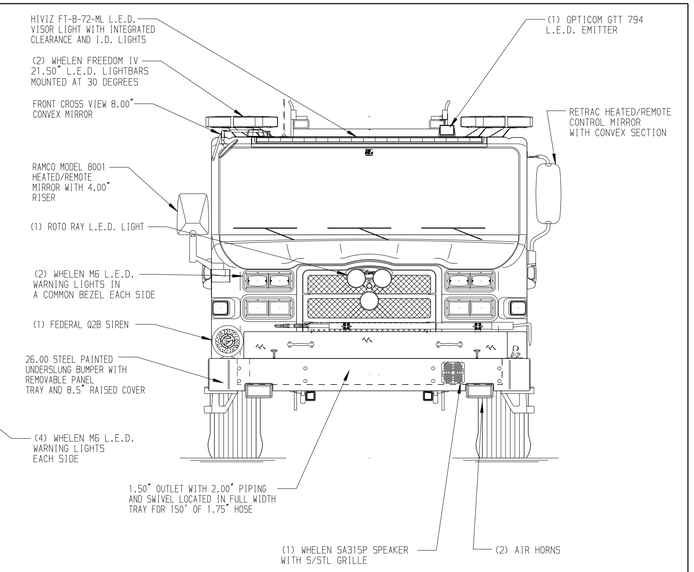

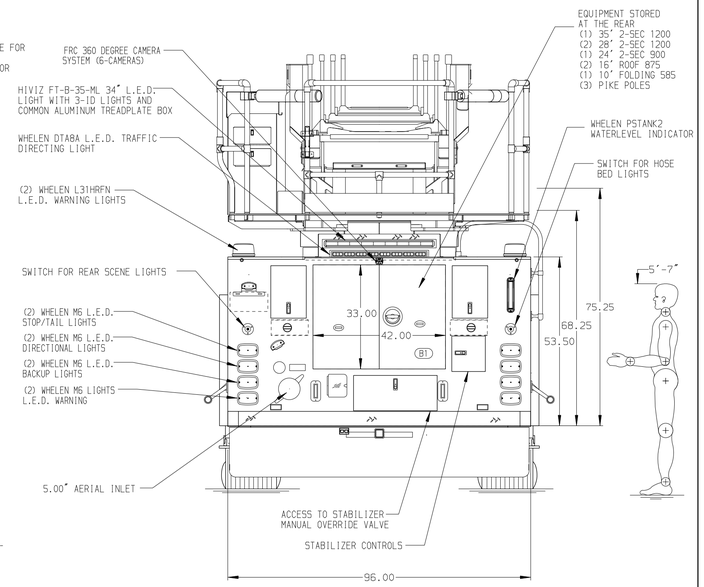

ALUMINUM BODY

SIDE ROLL AND FRONTAL IMPACT PROTECTION

NOTE

DIMENSIONS SHOWN ARE APPROXIMATE AND ARE SUBJECT TO MINOR DEVIATIONS AS MAY OCCUR OR BE NECESSARY IN CONSTRUCTION.
MINOR DETAILS NOT SHOWN.

1. NO LIMITED RETRACTION REQUIRED
2. 3.00" RAISED AERIAL PEDESTAL
2. SHORELINE RECEPTACLE WITH KUSSMAUL BLUE SEA SURE-EJECT LOCATED ON DRIVER SIDE OF THE CAB
4. AIR INLET/OUTLET WITH DISCONNECT COUPLING IN THE DRIVER SIDE STEPWELL
5. ONE 1.50 OUTLET WITH 2.00 PIPING AND SWIVEL LOCATED PER ORDER
6. RUNG LIGHING ON AERIAL LADDER PER ORDER
7. ROPE TIE DOWNS SHIPPED LOOSE
8. TWO 120V RECEPTACLES PER ORDER
9. 3.00" RAISED AERIAL PEDESTAL
10. LIFTING EYE ROPE RESCUE ATTACHMENT AT AERIAL TIP

REV	DATE	BY	CH
7	16OCT25	LWE	BYO
6	03JUN25	LWE	GKH
5	03APR25	LWE	SJS

CHASSIS DATA	
MAKE	PIERCE
MODEL	VELOCITY

Pierce MANUFACTURING INC.

TITLE	107' ASCENDANT AERIAL LADDER AND BODY ASSEMBLY 500 GALLON WATER TANK
FOR	GREELEY FIRE DEPARTMENT GREELEY, CO
DWG NO.	40554AD-SH1

JOB NO.	40554 01-02
SCALE	1:24
DATE	
DRAWN BY	LWE 06JAN23
CHECKED BY	BYO 07FEB25
SHEET SIZE	D
SHEET NO.	1 OF 2

View File Created 16-OCT-2025 10:39:52