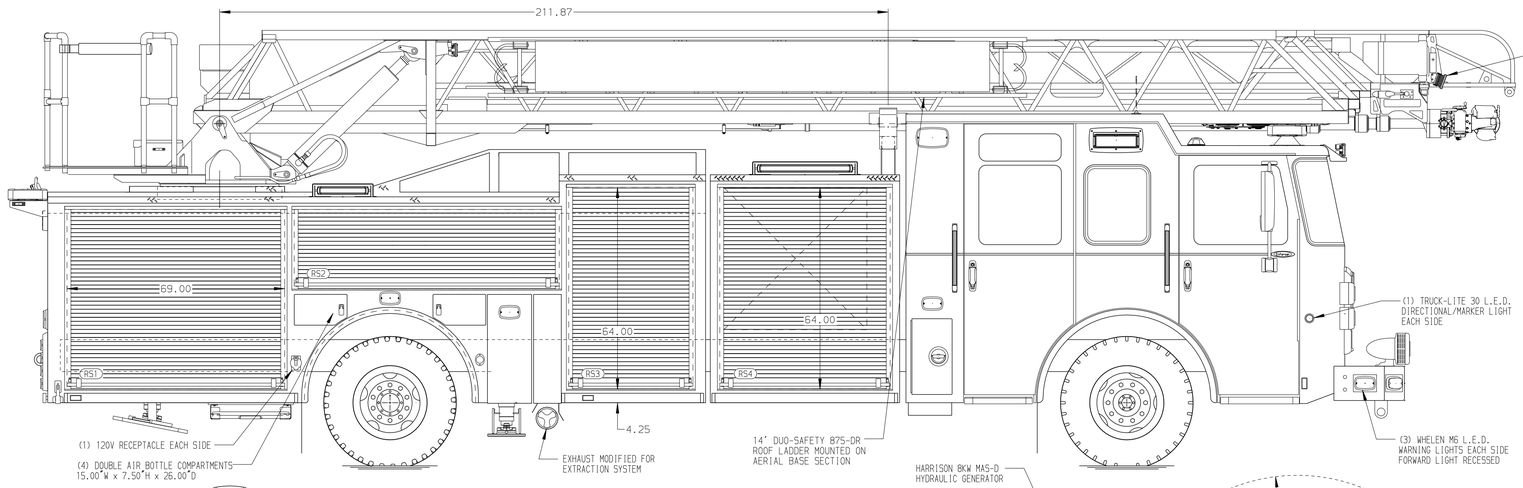

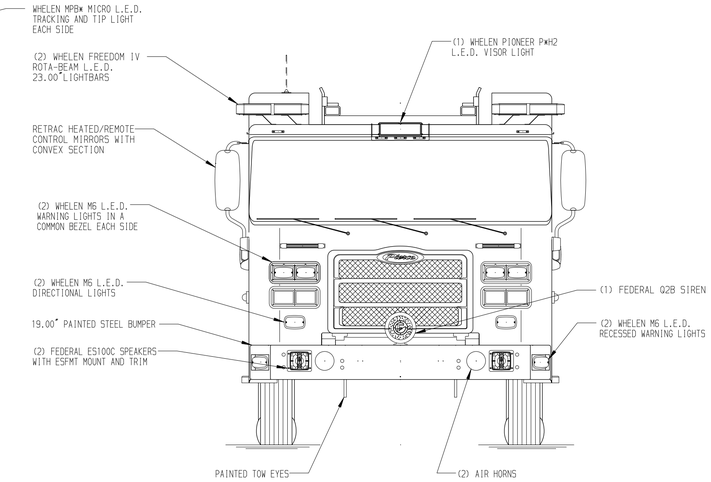

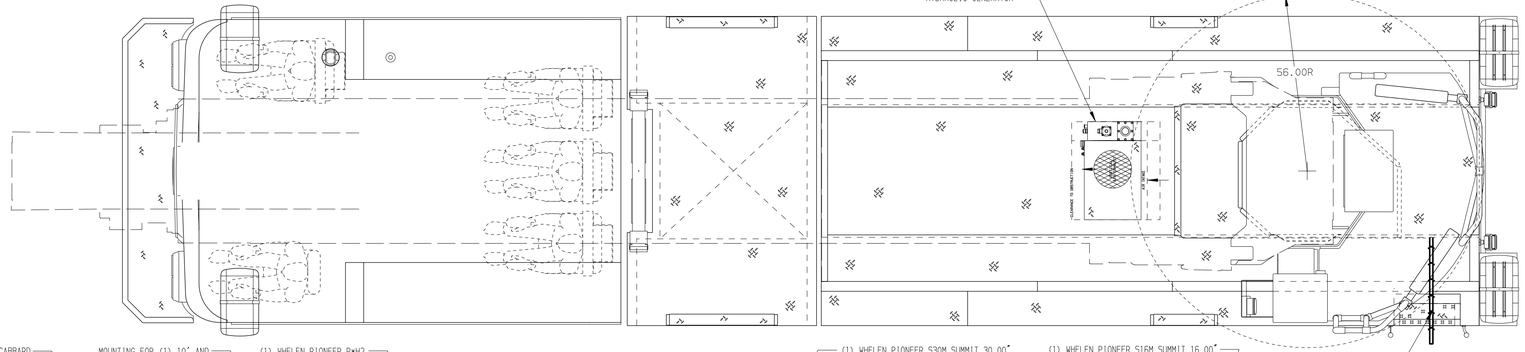

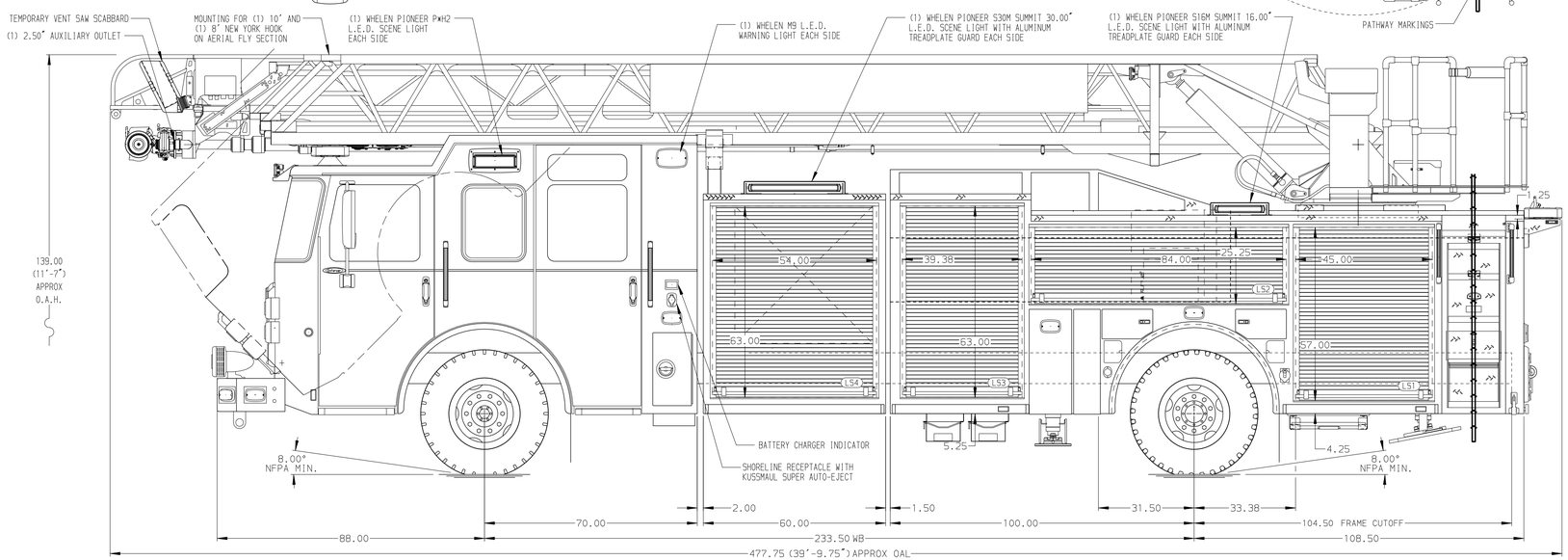

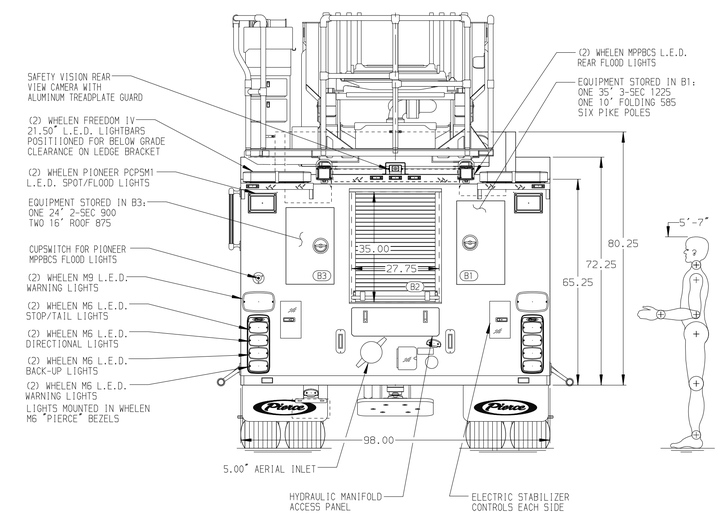

ALUMINUM BODY

SIDE ROLL AND FRONTAL IMPACT PROTECTION

NOTE

DIMENSIONS SHOWN ARE APPROXIMATE AND ARE SUBJECT TO MINOR DEVIATIONS AS MAY OCCUR OR BE NECESSARY IN CONSTRUCTION.
MINOR DETAILS NOT SHOWN.

1. ONSPOT AUTOMATIC TIRE CHAINS TO BE PROVIDED AT REAR
2. AIR INLET WITH DISCONNECT COUPLING AT FORWARD DRIVER'S SIDE STEPWELL
3. BATTERY CHARGER LOCATED PER ORDER
4. BATTERY CHARGER INDICATOR LOCATED PER ORDER
5. L.E.D. LIGHTING ON AERIAL LADDER SECTIONS
6. 2-WAY INTERCOM SYSTEM BETWEEN AERIAL TIP AND TURNTABLE
7. LIFTING EYE ROPE RESCUE ATTACHMENT AT AERIAL TIP
8. 1500 GPM HIGH FLOW WATERWAY
9. NO LIMITED RETRACTION
11. FOUR 120V RECEPTACLES IN CAB PER ORDER

REV	DATE	BY	CH
1	16DEC24	LWE	JJR
0	30OCT24	LWE	JJR

CHASSIS DATA
MAKE: PIERCE
MODEL: ENFORCER

Pierce MANUFACTURING INC.

TITLE: 107' ASCENDANT AERIAL LADDER AND BODY ASSEMBLY NO PUMP/NO TANK
FOR: KANSAS CITY KANSAS CITY, KANSAS
DWG NO.: 40571AD-SH1

JOB NO.	40571
SCALE	1:24
DATE	14AUG24
DRAWN BY	LWE
CHECKED BY	-
SHEET SIZE	D
SHEET NO.	1 OF 2

View File Created 16-DEC-2024 14:51:47