RIGHT SIDE COMPARTMENTS CONTAIN THE FOLLOWING:

COMPARTMENT RS1 CONTAINS:
- (2) STD DEPTH ADJ SLIDE OUT/TILT TRAYS
- (1) POWER DISTRIBUTION MODULE
- (1) FLOOR MOUNTED TRAY
-
-

COMPARTMENT RS2 CONTAINS:
- (1) ADJ SWING OUT TOOL BOARD
- (1) CIRCUIT BREAKER PANEL
- (1) GENERATOR METER PANEL
-
-

COMPARTMENT RS3 CONTAINS:
- (1) 1/2 DEPTH FLOOR MTD SLIDE OUT TRAY
- (1) 2-WAY FLOOR MTD SLIDE OUT TRAY
- (1) 1/2 DEPTH ADJ SLIDE OUT/TILT TRAY
-
-

COMPARTMENT RS4 CONTAINS:
- (1) 1/2 DEPTH ADJ SLIDE OUT TRAY
- (1) 1/2 DEPTH ADJ SLIDE OUT/TILT TRAY
- (1) FLOOR MOUNTED TRAY
-
-

COMPARTMENT RS5 CONTAINS:
- (1) CAB LIFT CONTROLLER
- (2) STD DEPTH ADJ SHELVES
- (1) FLOOR MOUNTED TRAY
- (2) SPEEDLAYS WITH 200' OF 1.75" HOSE
- (1) VERTICAL COMPARTMENT DIVIDER
- (1) 15/20A,120V DUPEX RECEPTACLE
-

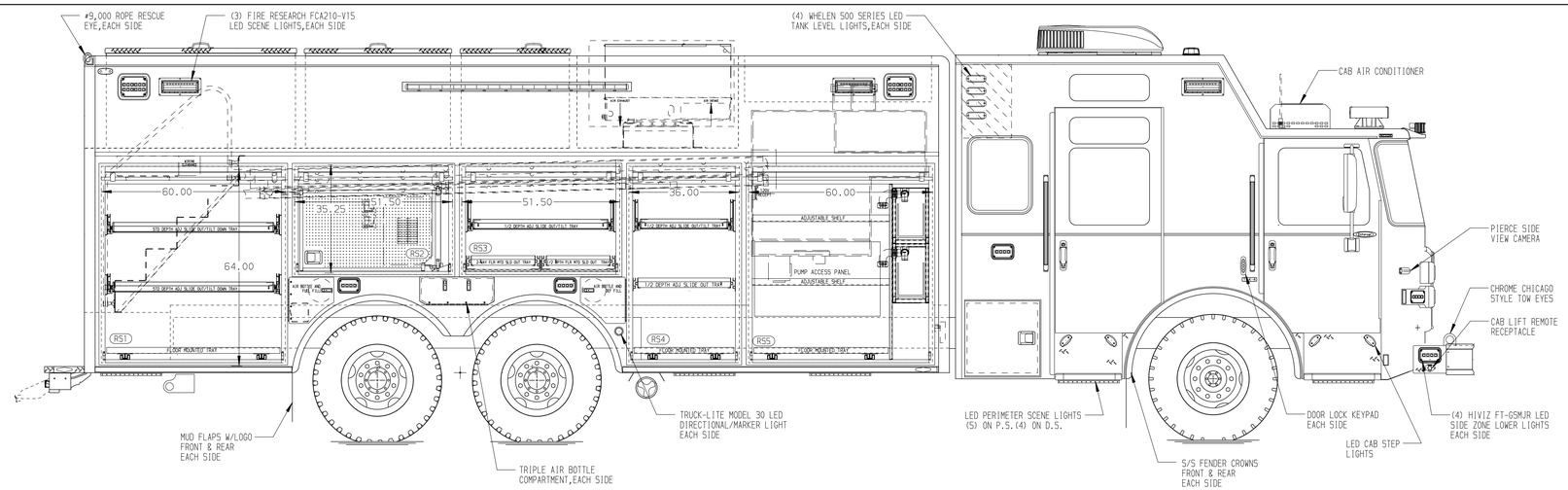

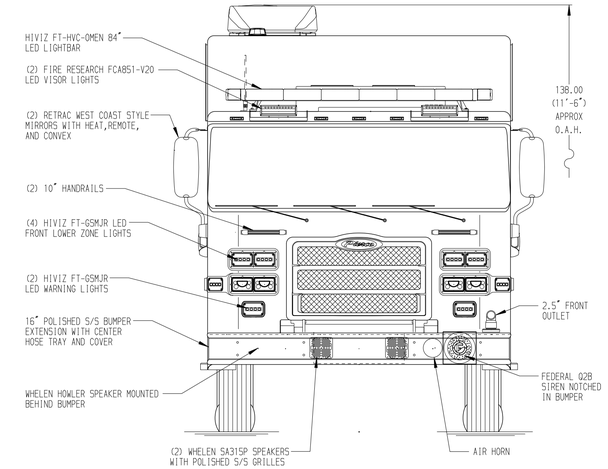

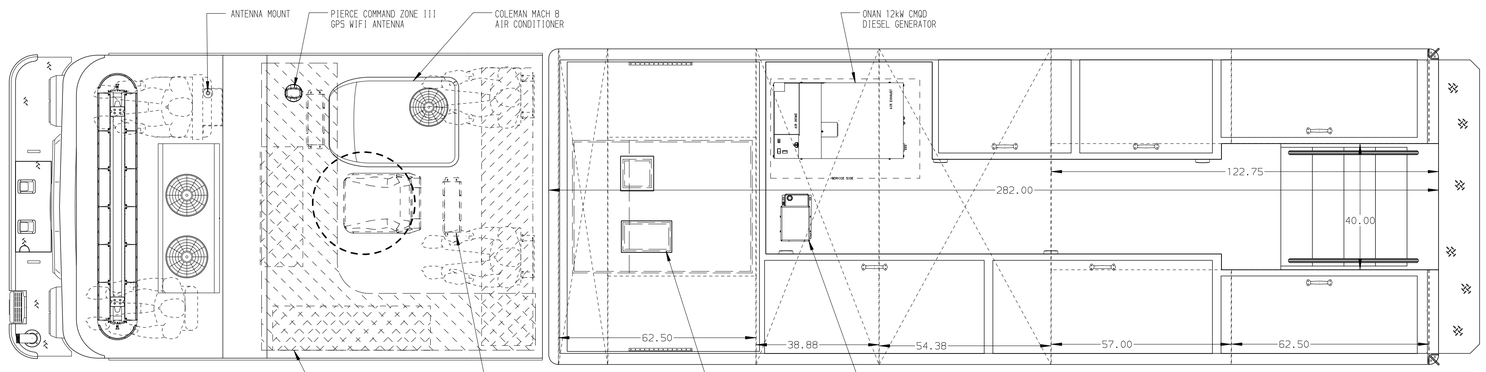

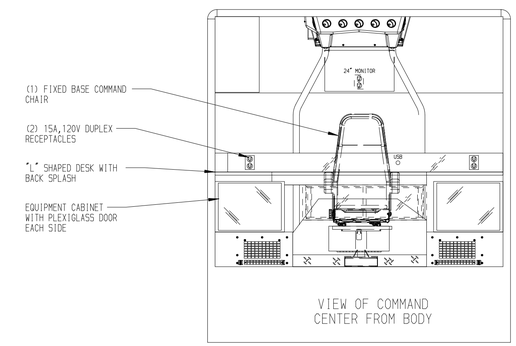

VIEW OF COMMAND CENTER FROM BODY

REAR COMPARTMENT CONTAINS THE FOLLOWING:

COMPARTMENT B1 CONTAINS:
- (1) 96"DP FLOOR MTD SLIDEMASTER TRAY
- (1) RACK FOR THE FOLLOWING:
  - (1) 24' 2-SECTION LADDER
  - (1) 14' ROOF LADDER
  - (1) 10' FOLDING LADDER
  - (2) PIKE POLES

COMPARTMENT B2 CONTAINS:
-
-
-
-
-
-

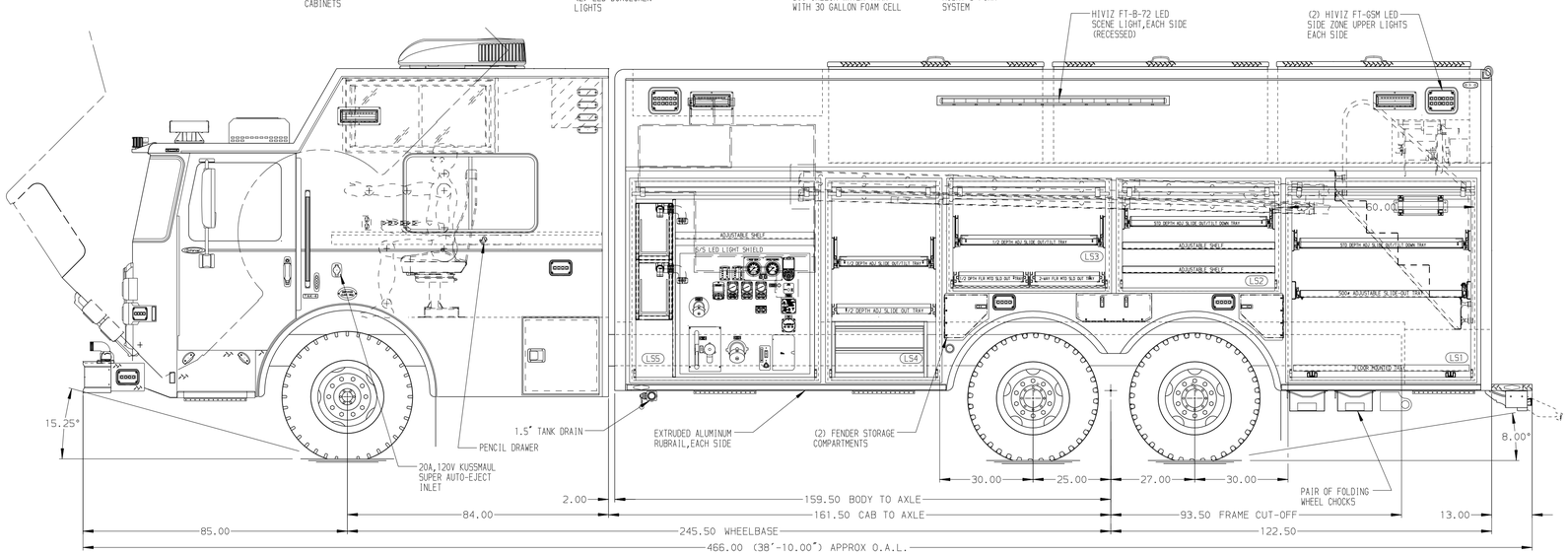

LEFT SIDE COMPARTMENTS CONTAIN THE FOLLOWING:

COMPARTMENT LS1 CONTAINS:
- (1) STD DEPTH ADJ SLIDE OUT TRAY
- (1) STD DEPTH ADJ SLIDE OUT/TILT TRAY
- (1) FLOOR MOUNTED TRAY
- (1) ELECTRIC CORD REEL WITH 200' OF 10/4 YELLOW CORD
-

COMPARTMENT LS2 CONTAINS:
- (2) STD DEPTH ADJ SHELVES
- (1) STD DEPTH ADJ SLIDE OUT/TILT TRAY
-

COMPARTMENT LS3 CONTAINS:
- (1) 1/2 DEPTH FLOOR MTD SLIDE OUT TRAY
- (1) 2-WAY FLOOR MTD SLIDE OUT TRAY
- (1) 1/2 DEPTH ADJ SLIDE OUT/TILT TRAY
-

COMPARTMENT LS4 CONTAINS:
- (1) 1/2 DEPTH ADJ SLIDE OUT TRAY
- (1) 1/2 DEPTH ADJ SLIDE OUT/TILT TRAY
- (1) 2-DRAWER C-TECH CABINET
-
-

COMPARTMENT LS5 CONTAINS:
- (1) STD DEPTH ADJ SHELF
- (2) SPEEDLAYS WITH 200' OF 1.75" HOSE
- (1) VERTICAL COMPARTMENT DIVIDER
-
-

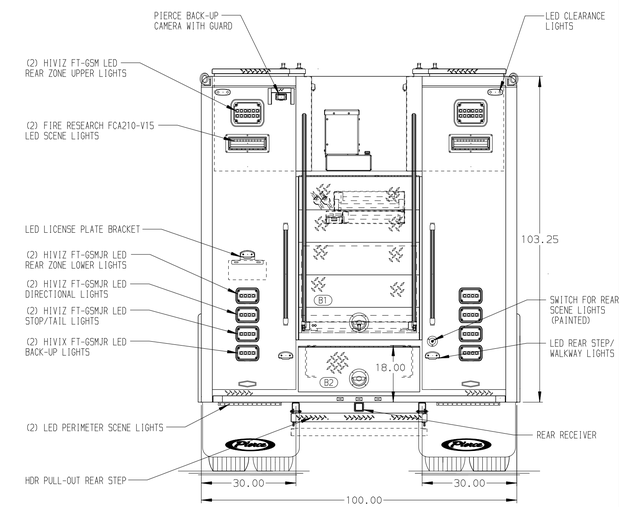

NOTE

DIMENSIONS SHOWN ARE APPROXIMATE AND ARE SUBJECT TO MINOR DEVIATIONS AS MAY OCCUR OR BE NECESSARY IN CONSTRUCTION.
MINOR DETAILS NOT SHOWN.

NOTES:
1. DARLEY HMS00 500 GPM PTO DRIVEN WATER PUMP
2. POLISHED S/S SCUFFPLATES LOCATED AT CAB DOOR JAMBS
3. POLISHED S/S GUARDS ON REAR CAB CORNERS
4. KUSSMAUL BATTERY CHARGER LOCATED BEHIND THE DRIVER'S SEAT
5. BATTERY CHARGE INDICATOR LOCATED ON DRIVER'S SEAT RISER
6. PULL-STRAPS ON ALL BODY ROLL-UP DOORS
7. AMDOR LED STRIP LIGHTS IN ALL BODY AND HATCH COMPARTMENTS
8. TURTLE TILE IN ALL BODY HATCH COMPARTMENTS AND FLOORS IN LS5,LS2,RS2,RS5, AND B2
9. TURTLE TILE IN ALL SHELVES AND TRAYS
10. (2) 15/20A,120V 4-PLACE RECEPACLE STRIPS,(1) IN FORWARD FACING CABINET AND (1) ON LEFT SIDE OF DESK

CLEAR DOOR WIDTH KEY

AMDOR ROLL UP DOORS:	-2 1/4"
GORTITE ROLL UP DOORS:	-2 1/2"
PIERCE DOUBLE LAP DOORS:	-4 1/4"
PIERCE LIFT-UP LAP DOORS:	-1 1/2"

(EX: 60"F-F - 2 1/4"= 57 3/4" CLEAR)
(F-F)= FRAME TO FRAME

MAXIMUM O.A.L. 39'-0"

MAXIMUM O.A.H. 11'-8"

REV	DATE	BY	CH
1	05MAY25	DHE	AZU
2	06MAR25	DHE	AZU
3	12DEC24	DHE	GFI

CHASSIS DATA	
MAKE	PIERCE
MODEL	EN8424
DWG NO.	40614AD

Pierce MANUFACTURING INC.

TITLE	HEAVY DUTY RESCUE WALKIN/NON-WALKIN COMBO
FOR	COUNTY OF MAUI BID #432 HUGHES FIRE EQUIPMENT,INC SCOTT OLMOS

JOB NO.	40614
SCALE	1:24
DATE	
DRAWN BY	DHE 12NOV24
CHECKED BY	GFI 14NOV24
SHEET SIZE	D
SHEET NO.	1 OF 1