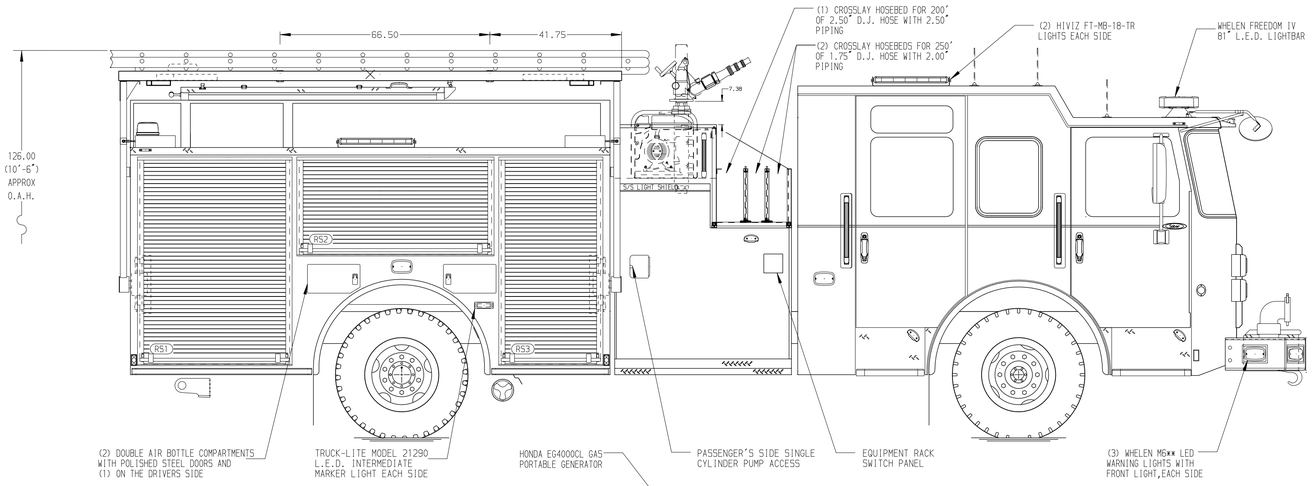

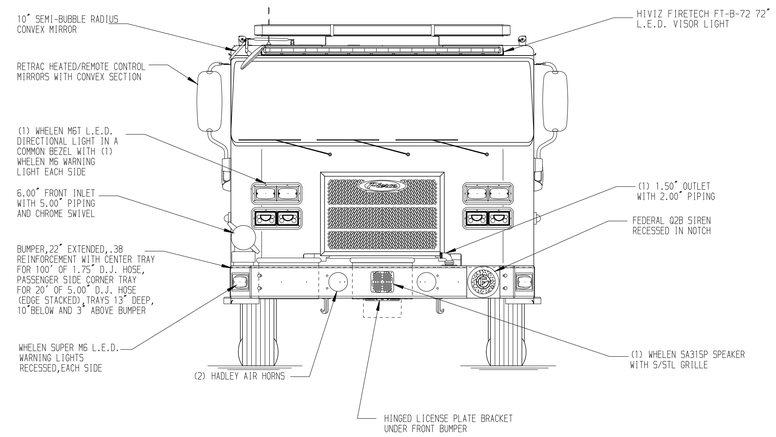

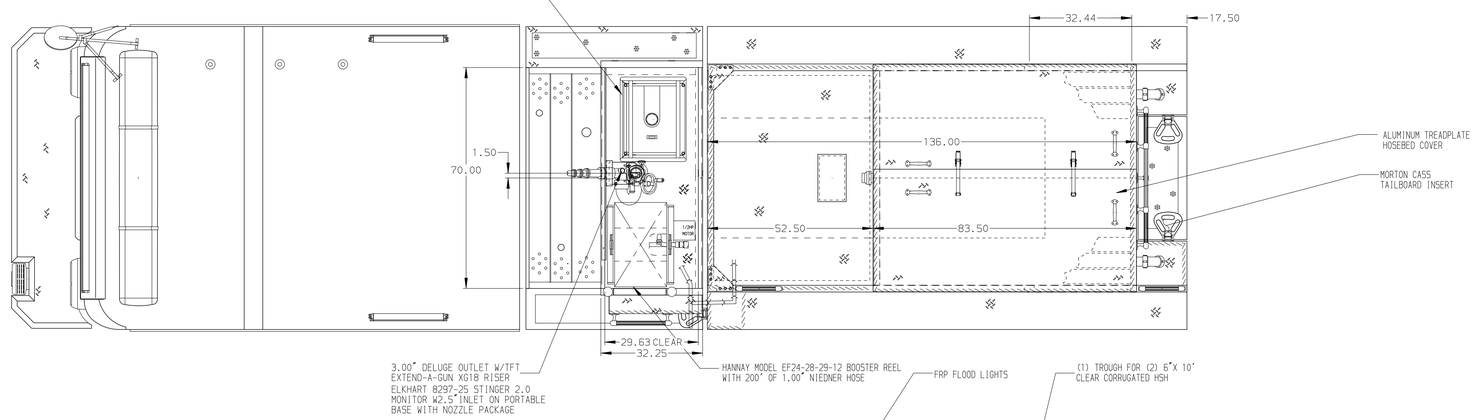

HOSEBED CAPACITIES

1 - 400' OF 2.50" D.J. POLY HOSE
2 - 1000' OF 5.00" D.J. POLY HOSE
3 - 400' OF 2.50" D.J. POLY HOSE
4 - 400' OF 1.75" D.J. POLY HOSE

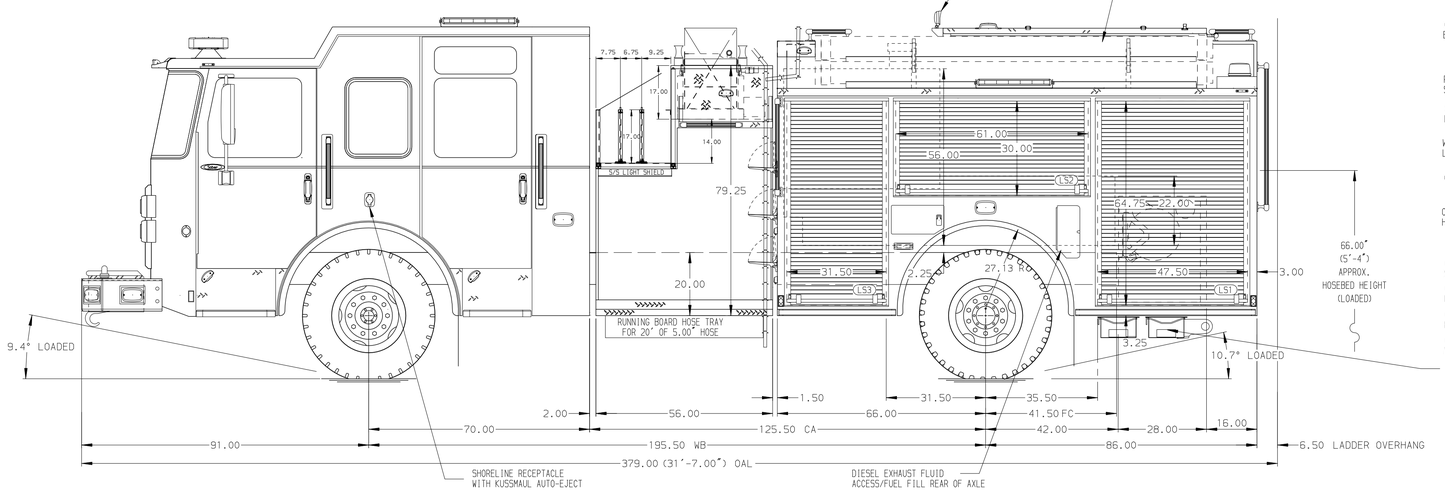

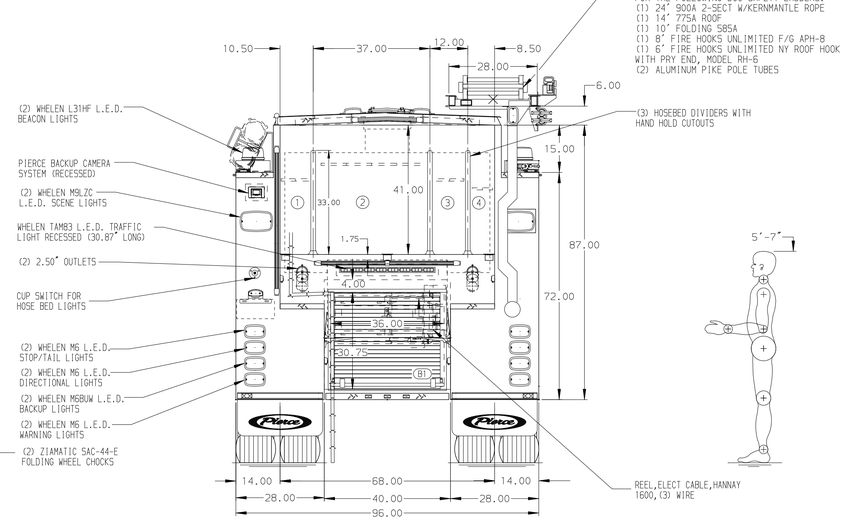

ALUMINUM BODY

MAXIMUM O.A.L. 379.00"

MAXIMUM O.A.H. 128.00"

NOTE

DIMENSIONS SHOWN ARE APPROXIMATE AND ARE SUBJECT TO MINOR DEVIATIONS AS MAY OCCUR OR BE NECESSARY IN CONSTRUCTION.
MINOR DETAILS NOT SHOWN.

REV	DATE	BY	CH
V	22OCT24	RHU	CCS
V	21OCT24	KLE	CCS
V	12SEP24	VHO	CCS

CHASSIS DATA — MAKE: PIERCE — MODEL: SABER FR

Pierce MANUFACTURING INC.

TITLE: 1500 GPM, 750G WATER TANK 152" 2G PUMPER, HARD WIRED

FOR: UNITED STATES MARINE CORPS MCAS CHERRY POINT HAVELOCK, NORTH CAROLINA

DWG NO.: 40652AD

JOB NO.	SCALE	DRAWN BY	CHECKED BY	SHEET SIZE	SHEET NO.
40652	1:24	JJB	SJS	D	1 OF 1

DATE: 15JUL24 (DRAWN BY) 15JUL24 (CHECKED BY)

View File Created 22-OCT-2024 11:09:20