PUMPER

BODY
Medium Aluminum 2nd Gen Pumper

CHASSIS
Saber FR Chassis

CHASSIS

AXLE, FRONT, CUSTOM
18,000 lb Meritor Axle

AXLE, REAR
27,000 lb Meritor Axle

ENGINE
450 HP Cummins L9 Engine

TRANSMISSION
Allison 6th Gen, 3000 EVS P

BUMPER
22" Extended Painted Steel

CAB
7000 Saber FR Cab

BODY

TOTAL TANK CAPACITY
1000 Gallon New York Style Poly Tank

WATER CAPACITY
975 Gallons of Water

FOAM CELL
25 Gallon Foam Cell

COMPT, PUMPER, REAR
Tool, Rear Compt

COMPT, PUMPER, LEFT SIDE
152" Lap Full Height Front & Rear FDLER

COMPT, PUMPER, RIGHT SIDE
152" Lap Low FDLER

FIRE SUPPRESSION

PUMPHOUSE
45" Control Zone Side Mount

PUMP
1500 GPM Waterous CXC20

CROSSLAYS, 1.50"
(2) 1.50" Standard Capacity

CROSSLAYS, 2.50"
2.50" Crosslays Not Required

SPEEDLAYS
Speedlays Not Required

GENERATOR
Generator Not Required

FOAM SYSTEM
Foam System Not Required

SAFETY
Side Roll and Frontal Impact Protection

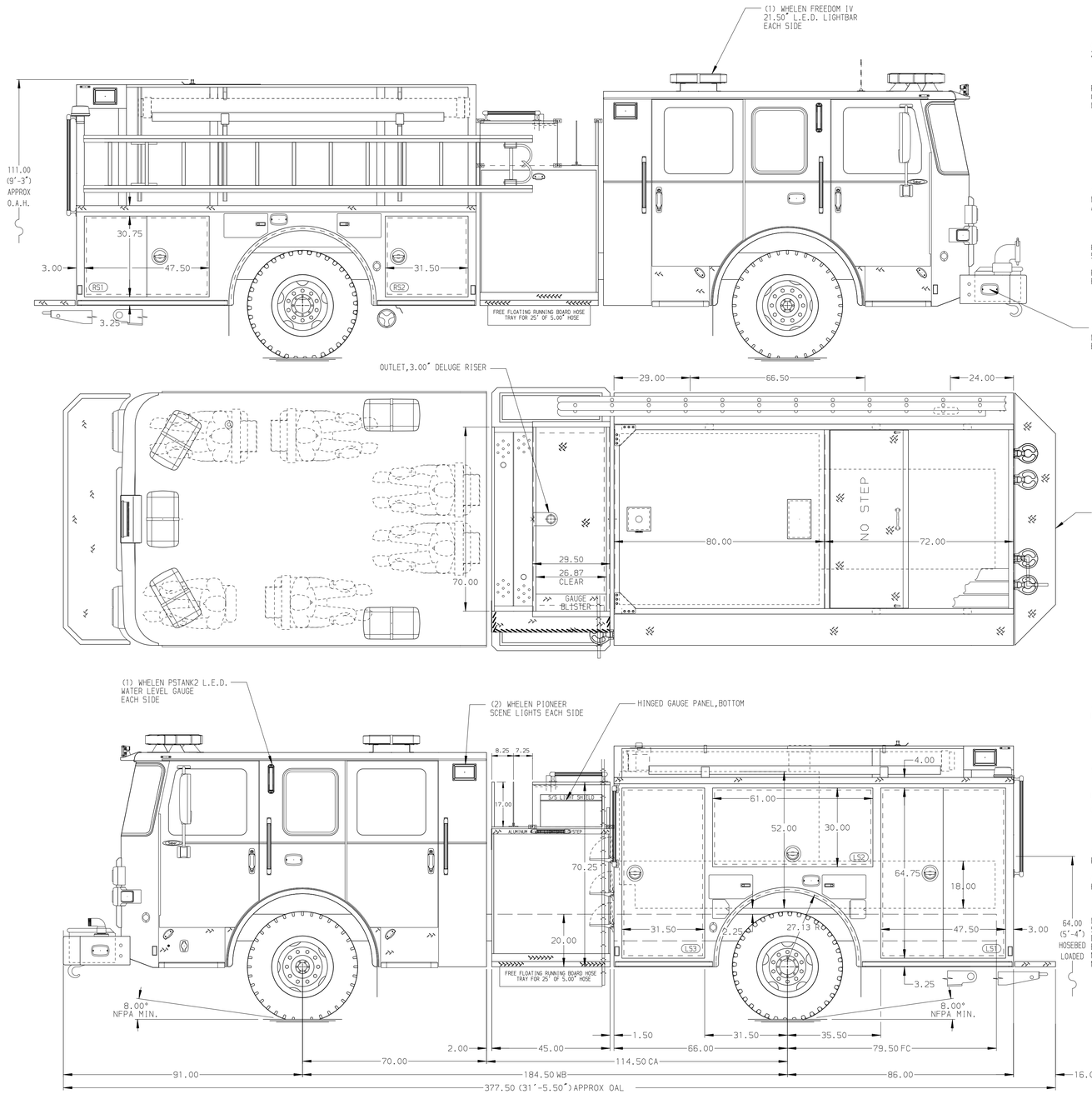

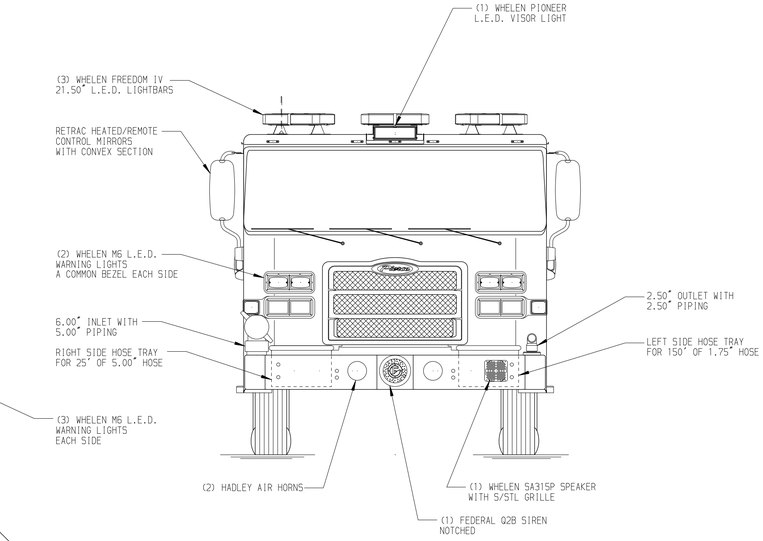

HOSEBED CAPACITY

BED 1
200' OF 1.75" COTTON SINGLE STACK

BED 2
200' OF 1.75" COTTON SINGLE STACK

BED 3
1000' OF 5.00" RUBBER LDH

BED 4
150' OF 2.50" COTTON SINGLE STACK

BED 5
400' OF 2.5" COTTON

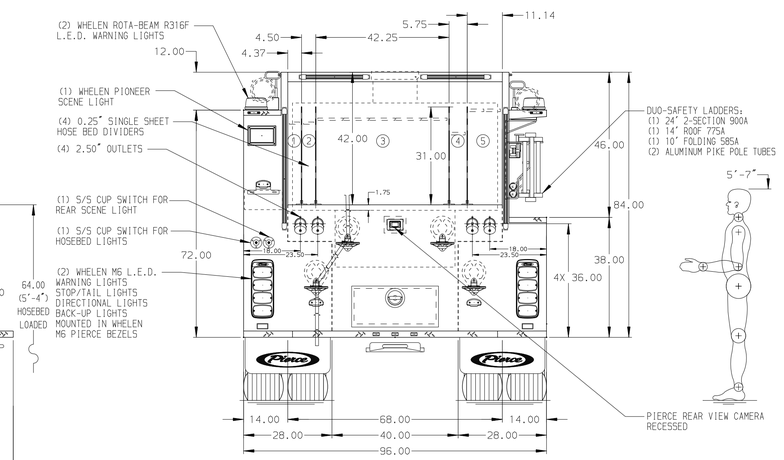

NOTE
DIMENSIONS SHOWN ARE APPROXIMATE AND ARE SUBJECT TO MINOR DEVIATIONS AS MAY OCCUR OR BE NECESSARY IN CONSTRUCTION.
MINOR DETAILS NOT SHOWN.

REV	DATE	BY	CH
V	22FEB24	RHU	NAS

CHASSIS DATA
MAKE: PIERCE
MODEL: SABER FR

Pierce MANUFACTURING INC.

TITLE: Pierce Pumper Approval Drawing
FOR: Drexel Fire Department
DWG NO.: 40686AD

JOB NO.	40686
SCALE	1:24
DATE	
DRAWN BY	JAM 03JAN24
CHECKED BY	AMI 05JAN24
SHEET SIZE	D
SHEET NO.	1 OF 1

View File Created 22-FEB-2024 14:01:18