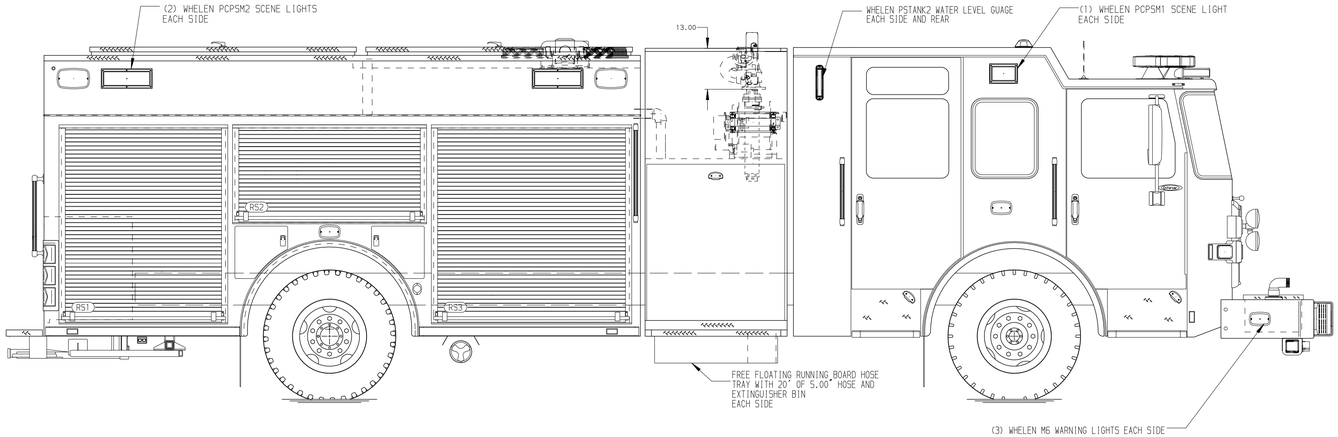

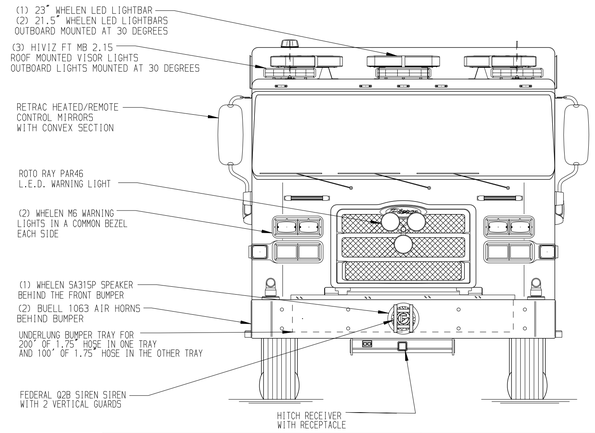

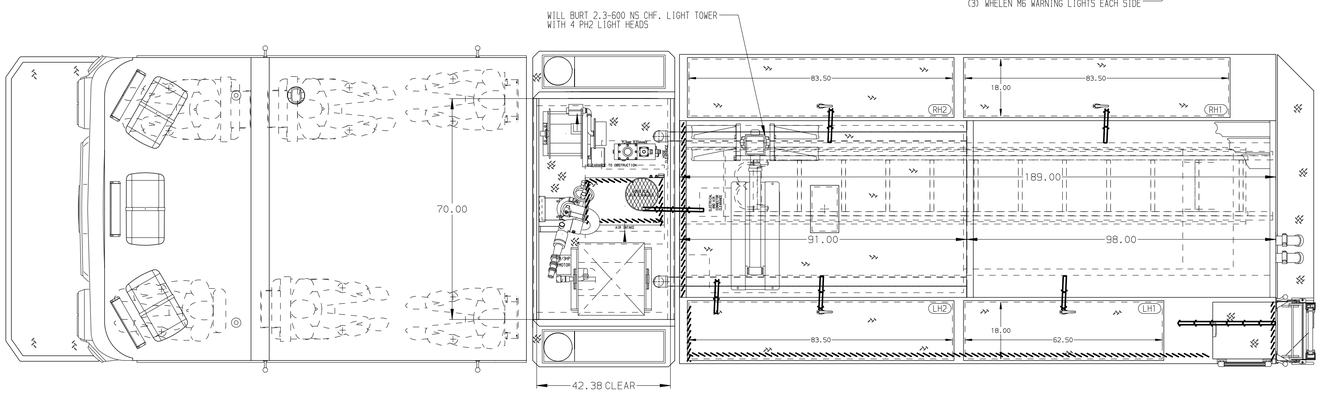

BODY	TOTAL TANK CAPACITY
Pumper, HDRP, Aluminum	1000 Gallon Poly Tank
COMPT,LEFT SIDE	WATER CAPACITY
189" Rollup Full Height & Depth Front & Rear	1000 Gallons of Water
COMPT,RIGHT SIDE	FOAM CELL CAPACITY
189" Rollup Full Height & Depth Front & Rear	Foam Cell Not Required
COMPT,REAR	FOAM SYSTEM
29.50" FF Rollup Rear Compt w/Tailboard	Foam System Not Required

HOSEBED CAPACITY

BED 1
100' OF 2.50" D.J. POLY HOSE (BELOW)
200' OF 1.75" D.J. POLY HOSE (ABOVE) (PRE-CONNECTED)

BED 2
900' OF 5.00" D.J. POLY HOSE

BED 3
200' OF 3.00" D.J. POLY HOSE

BED 4
300' OF 1.75" D.J. POLY HOSE (PRE-CONNECTED)

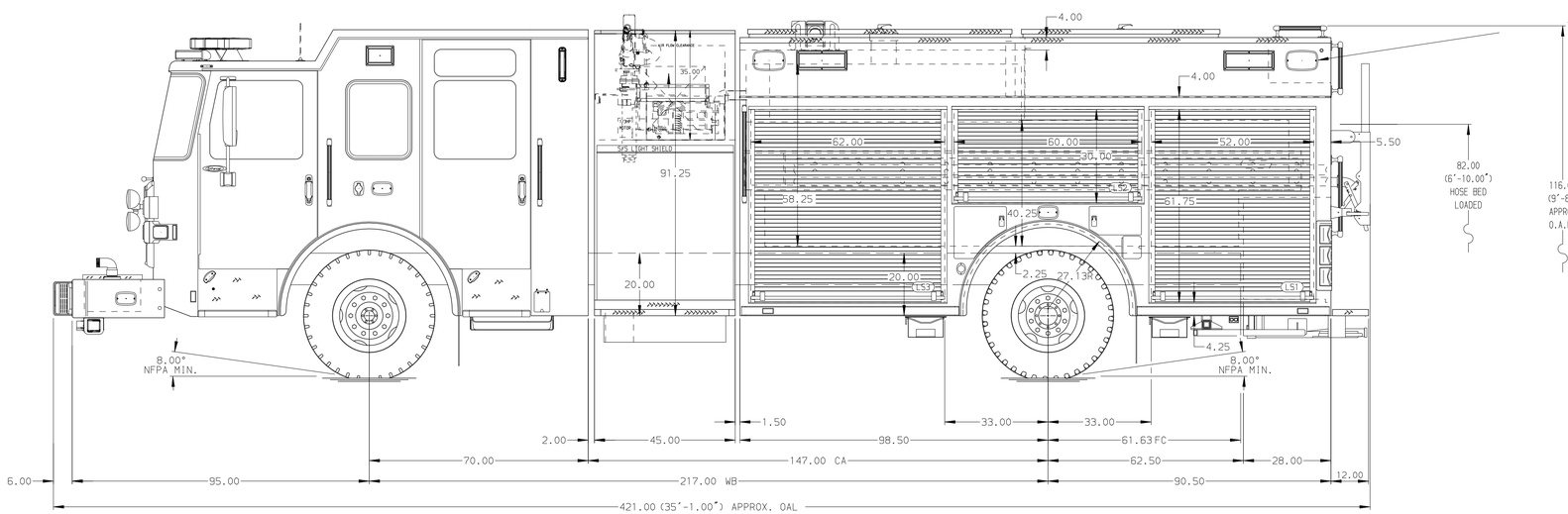

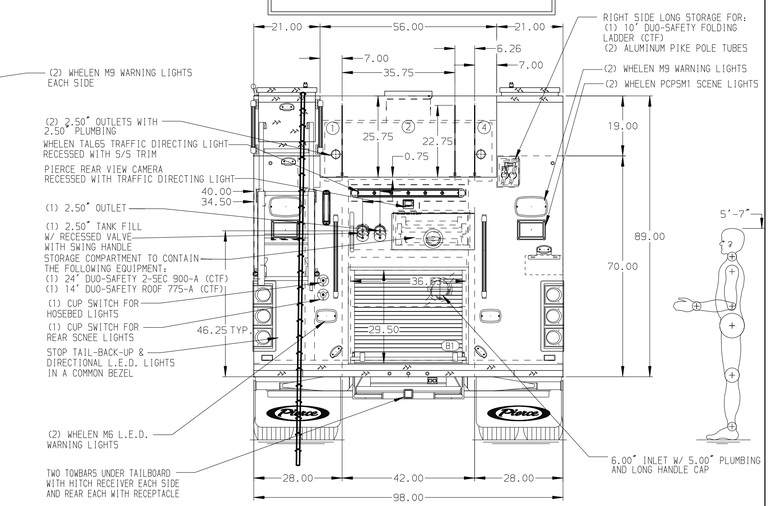

CHASSIS	CAB	AXLE,FRONT,CUSTOM	TRANSMISSION	PUMPHOUSE	CROSSLAYS,1.50"	SPEEDLAYS
Enforcer Chassis	7010 Enforcer Cab	20,000 Lb Dana Axle	ALLison 6th Gen, 4500 EVS P	45" Control Zone Side Mount	1.50" Crosslays Not Required	Speedlays Not Required
ENGINE	BUMPER	AXLE,REAR		PUMP	CROSSLAYS,2.50"	
510 HP Paccar MX13 Engine	26" Extended Painted Steel Underslung Bumper	31,000 Lb Dana Axle		1500 GPM Hale QMAX	2.50" Crosslay Not Required	Harrison 6KW MCR

NOTE

DIMENSIONS SHOWN ARE APPROXIMATE AND ARE SUBJECT TO MINOR DEVIATIONS AS MAY OCCUR OR BE NECESSARY IN CONSTRUCTION.
MINOR DETAILS NOT SHOWN.

1. 2.50" OUTLET WITH 2.50" PLUMBING ON TOP OF THE BUMPER ON THE LEFT AND RIGHT SIDE
2. AIR INLET W/ DISCONNECT COUPLING ON DRIVER'S SIDE STEP WELL.
3. SHORELINE RECEPTACLE W/ KUSSMAUL SUPER AUTO EJECT ON DRIVER'S SIDE CAB SIDE.
4. HANNAY MODEL SREF 28-23-24 BOOSTER REEL FOR 200' OF 0.75" HOSE IN THE LEFT SIDE OF THE CARGO AREA
5. BATTERY CHARGER INDICATOR ON THE DRIVER'S SEAT RISER
6. BATTERY CHARGER BEHINDE THE DRIVER'S SEAT ON BRACKET
7. HANNAY MODEL E1618-17-18 ELECTRIC CORD REEL FOR 200' OF 10/3 CORD IN RIGHT SIDE OF THE CARGO AREA

REV	DATE	BY	CH
1	20DEC24	LST	CSH
2	21NOV24	LST	CSH

CHASSIS DATA — MAKE: PIERCE — MODEL: ENFORCER

Pierce MANUFACTURING INC.

TITLE	Pierce Pumper Approval Drawing -
FOR	Pulaski Fire Department -
DWG NO.	40696AD-SH1
JOB NO.	40696
SCALE	1:24
DATE	
DRAWN BY	LST 02JUL24
CHECKED BY	AMI 03JUL24
SHEET SIZE	D
SHEET NO.	1 OF 2

View File Created 20-DEC-2024 12:59:39