PUMPER

BODY
Long Aluminum 2nd Gen Pumper

CHASSIS
Impel Chassis

CHASSIS

AXLE, FRONT, CUSTOM
19,500 lb TAK-4 Axle

AXLE, REAR
24,000 lb Meritor Axle

ENGINE
450 HP Cummins L9 Engine

TRANSMISSION
Allison 6th Gen, 3000 EVS PR

BUMPER
19" Extended Painted Steel

CAB
7010 Enforcer Cab

BODY

WATER TANK
750 Gallon Water Tank

COMPT, PUMPER, REAR
51.25" FF Rollup Rear Compt

COMPT, PUMPER, LEFT SIDE
161" Rollup Full Height Front & Rear, FDLER

COMPT, PUMPER, RIGHT SIDE
161" Rollup Full Height Front & Rear, FDLER

FIRE SUPPRESSION

PUMPHOUSE
48" Control Zone Side Mount

PUMP
1500 GPM Waterous CSU

CROSSLAYS, 1.50"
(2) 1.50" Standard Capacity

CROSSLAYS, 2.50"
(1) 2.50" Standard Capacity

SPEEDLAYS
Speedlays Not Required

GENERATOR
Generator Not Required

Foam System
Foam System Not Required

Foam Cell
Foam Cell Not Required

Side Roll and Frontal Impact Protection

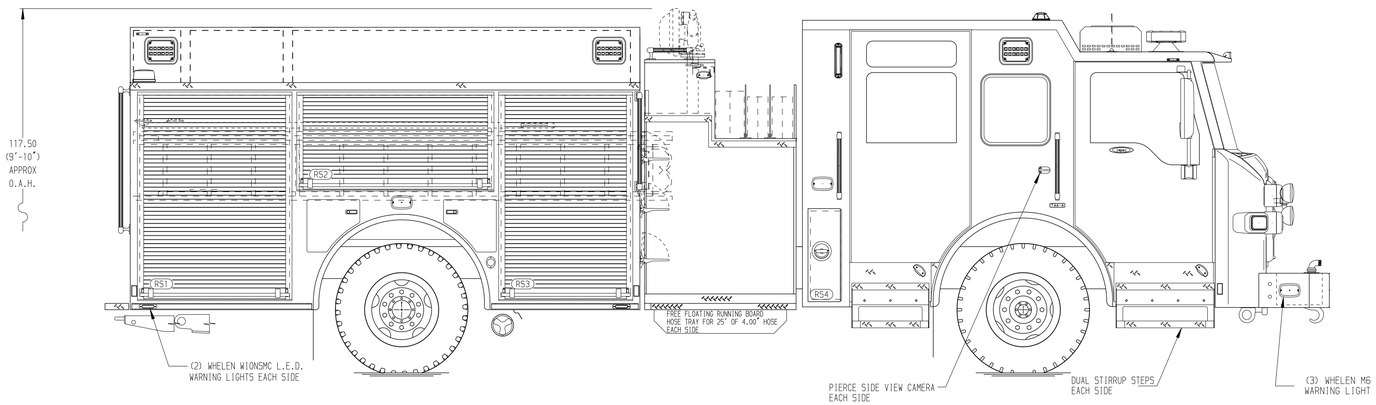

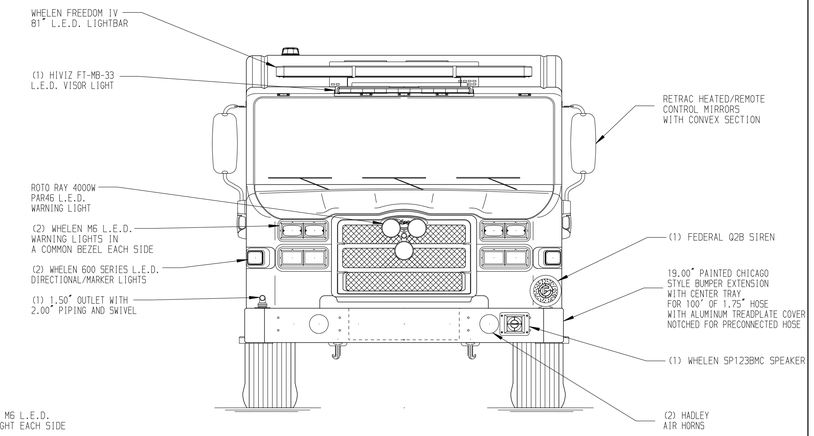

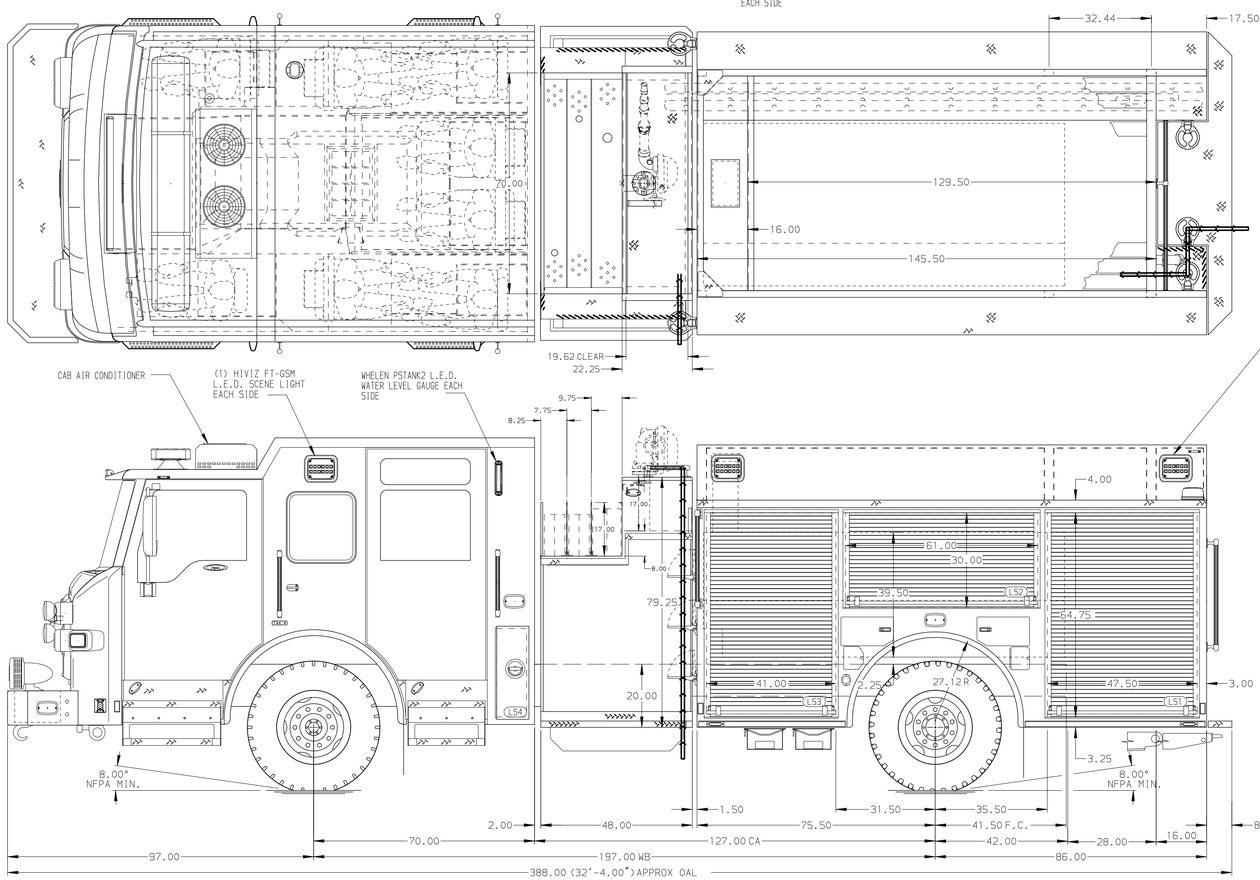

HOSEBED CAPACITY

BED 1
200' OF 1.75" D.J. POLY HOSE

BED 2
600' OF 2.50" D.J. POLY HOSE

BED 3
1000' OF 4.00" L.D.H SUPPLY HOSE

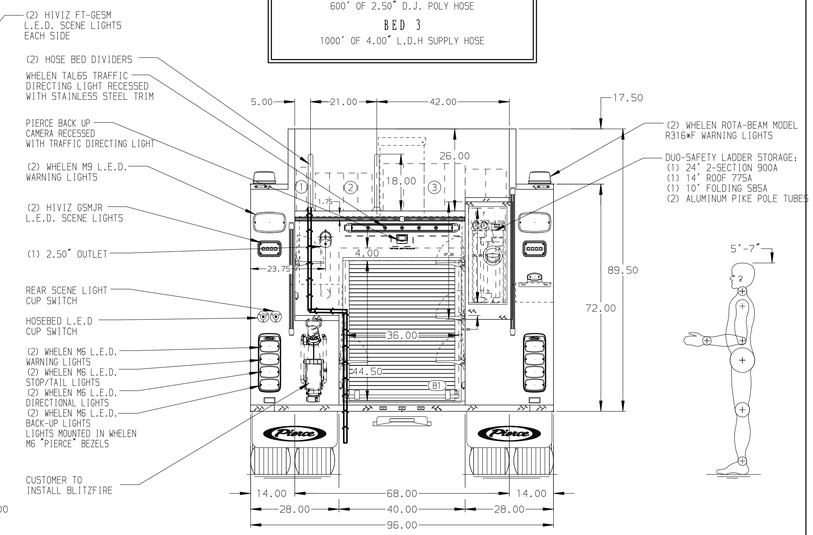

Pierce MANUFACTURING INC.

JOB NO.	40703 01-02
SCALE	1:24
DATE	
TITLE	1500 GPM, 750 GAL WATERTANK 161" BODY, IMPEL ESP ELECTRICAL SYSTEM
FOR	EAST BANK CONSOLIDATED FIRE DEPARTMENT JEFFERSON, LOUISIANA
DRAWN BY	LST 11SEP24
CHECKED BY	KBO 16SEP24
SHEET SIZE	D
SHEET NO.	1 OF 2
DWG NO.	40703AD-SH1

CHASSIS DATA
MAKE: PIERCE
MODEL: IMPEL FR

REV	DATE	BY	CH
5	09JAN24	LST	KBO
4	12NOV24	LST	KBO

NOTE
DIMENSIONS SHOWN ARE APPROXIMATE AND ARE SUBJECT TO MINOR DEVIATIONS AS MAY OCCUR OR BE NECESSARY IN CONSTRUCTION.
MINOR DETAILS NOT SHOWN.

1. AIR INLET/OUTLET WITH DISCONNECT COUPLING ON DRIVER SIDE PUMP PANEL
2. BATTERY CHARGER LOCATED IN COMPARTMENT PER SHOP ORDER
3. BATTERY CHARGE INDICATOR LOCATED NEAR DRIVER SEAT RISER WITH BRACKET
4. ZIAMATIC SAC-44-E WHEEL CHOCKS AND BRACKETS MOUNTED UNDER DS FORWARD COMPARTMENT

View File Created 09-JAN-2025 13:25:26