# PUMPER

## BODY
Long Aluminum 2nd Gen Pumper

## CHASSIS
Saber FR Chassis

# CHASSIS

## AXLE,FRONT,CUSTOM
19,500 Lb TAK-4 Axle

## AXLE,REAR
24,000 Lb Meritor Axle

## ENGINE
450 HP Cummins L9 Engine

## TRANSMISSION
Allison 6th Gen, 3000 EVS P

## BUMPER
19" Extended Polished Stainless Steel

## CAB
7010 Saber FR Cab

# BODY

## TOTAL TANK CAPACITY
775 Gallon Poly Tank

## WATER CAPACITY
750 Gallons of Water

## FOAM CELL
25 Gallon Foam Cell

## COMPT,PUMPER,REAR
44.50" FF RollUp Rear Compt

## COMPT,PUMPER,LEFT SIDE
161" RollUp Full Height & Depth Front & Rear

## COMPT,PUMPER,RIGHT SIDE
161" RollUp Full Height Front & Rear FDLER

# FIRE SUPPRESSION

## PUMPHOUSE
45" Control Zone Side Mount

## PUMP
1500 GPM Waterous CSU

## CROSSLAYS,1.50"
(2) 1.50" Standard Capacity

## CROSSLAYS,2.50"
(1) 2.50" Standard Capacity

## SPEEDLAYS
Speedlays Not Required

## GENERATOR
Generator Not Required

## FOAM SYSTEM
Provisions for Husky 3/12

# SAFETY
Side Roll and Frontal Impact Protection

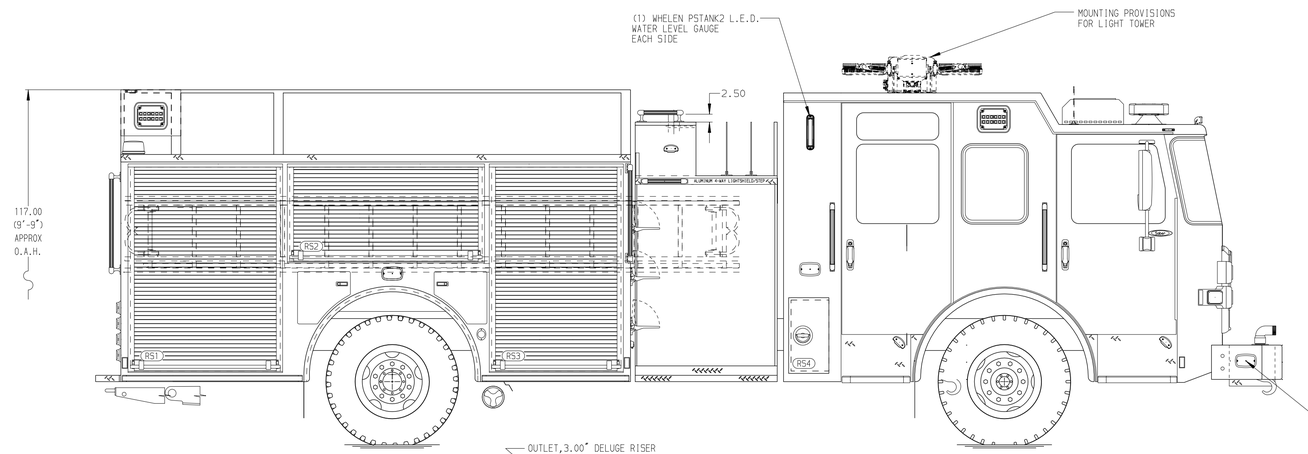


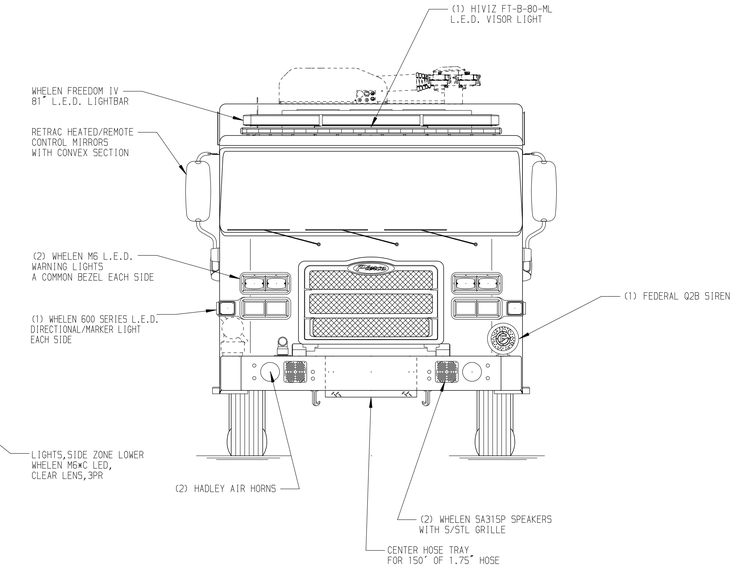


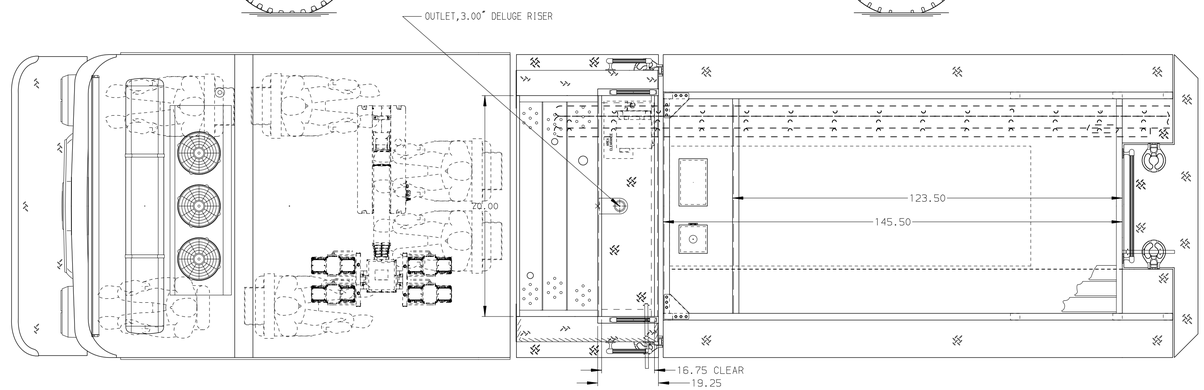


## HOSEBED CAPACITY

**BED 1**
1000' OF 5.00" D.J. POLY HOSE

**BED 2**
500' OF 3.00" D.J. POLY HOSE

**BED 3**
500' OF 3.00" D.J. POLY HOSE

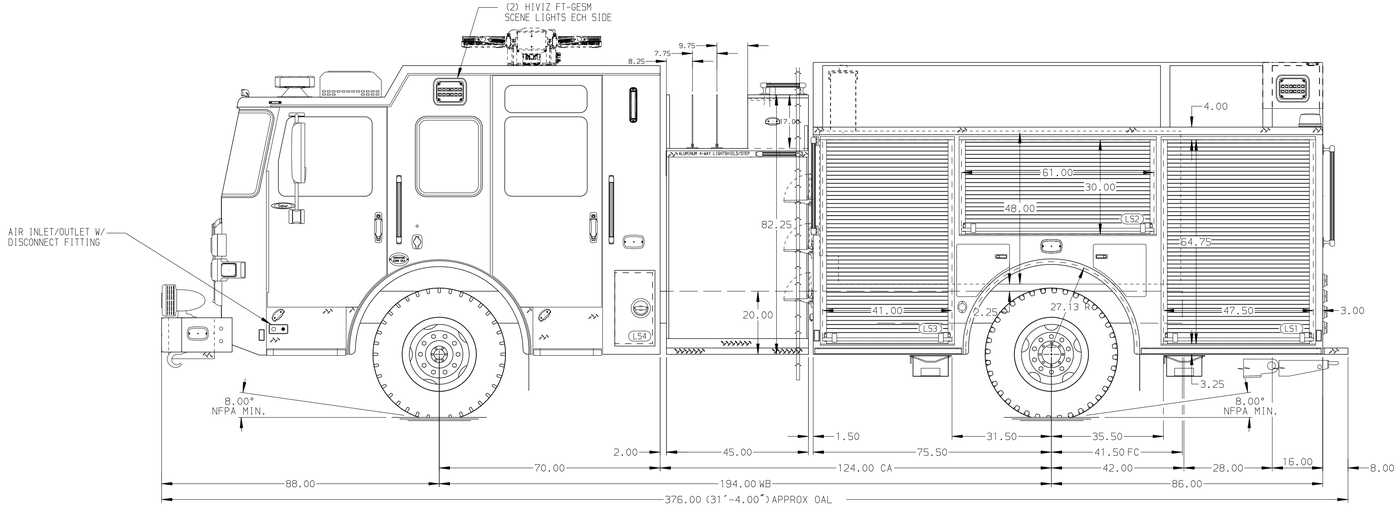


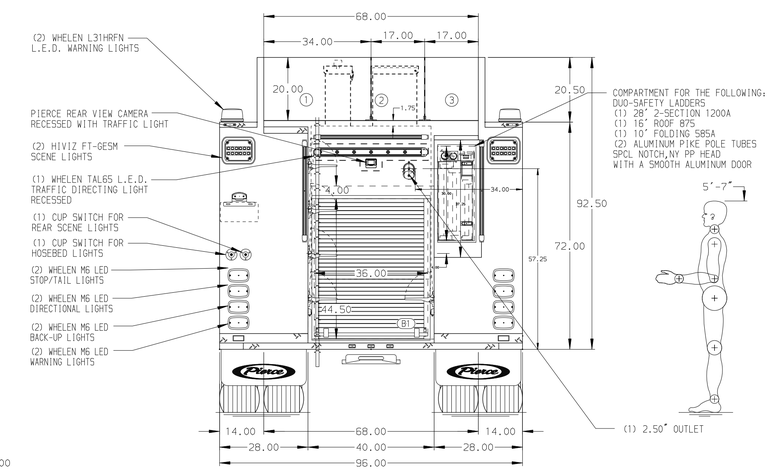


NOTE
DIMENSIONS SHOWN ARE APPROXIMATE AND ARE SUBJECT TO MINOR DEVIATIONS AS MAY OCCUR OR BE NECESSARY IN CONSTRUCTION.
MINOR DETAILS NOT SHOWN.

| REV | DATE | BY | CH |
|---|---|---|---|
| 1 | 12AUG24 | ADP | CCS |
| 2 | 23MAY24 | VHO | CCS |

CHASSIS DATA
MAKE: PIERCE
MODEL: SABER FR

Pierce MANUFACTURING INC.

TITLE: 1500 GPM,750G TANK,750 WATER,25G FOAM 161" PUMPER,LONG, ALUMINUM,2ND GEN,SABER
FOR: TEN-8 FIRE & SAFETY FORT MYERS BEACH
DWG NO.: 40765AD

| | |
|---|---|
| JOB NO. | 40765 |
| SCALE | 1:24 |
| DATE | |
| DRAWN BY | RWR |
| 13FEB24 | |
| CHECKED BY | AMI |
| 14FEB24 | |
| SHEET SIZE | D |
| SHEET NO. | 1 OF 1 |

View File Created 13-AUG-2024 10:47:14