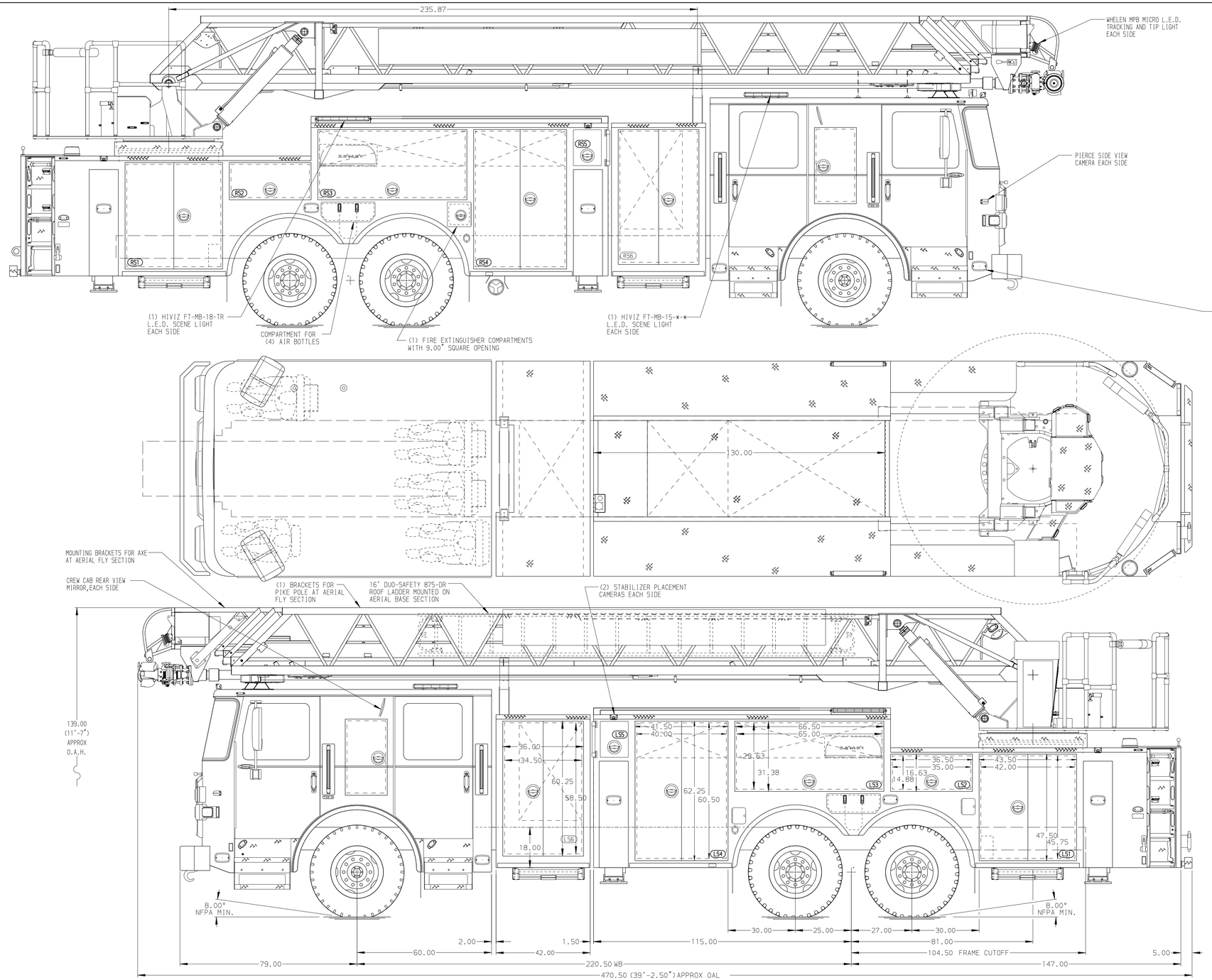

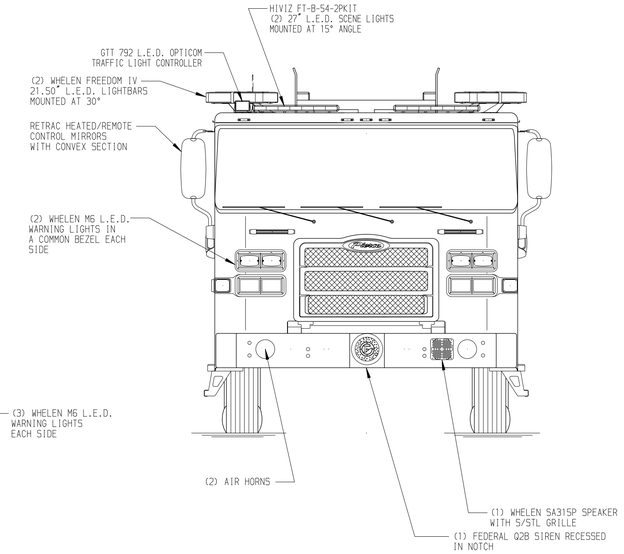

BODY
Aerial, HD Ladder 105', Alum Body
COMPT,LEFT SIDE FRONT
FH/FD Lap Forward w/o Chute
COMPT,LEFT SIDE REAR
FH/FD Lap Rearward
COMPT,RIGHT SIDE FRONT
FH/FD Lap Forward w/o Chute
COMPT,RIGHT SIDE REAR
FH/FD Lap Rearward

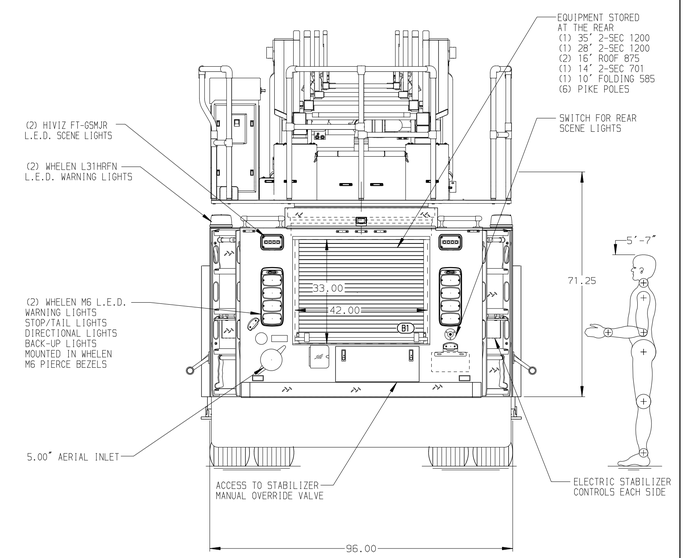

CHASSIS	CAB	AXLE,FRONT,CUSTOM	TRANSMISSION	COMPARTMENT-NO PUMP	SAFETY
Enforcer Chassis	6000 Enforcer Cab	19,500 Lb TAK-4 Axle	ALLison 6th Gen, 4500 EVS P	42" Wide w/Double Doors	-
ENGINE	**BUMPER**	**AXLE,REAR**	**GENERATOR**		Frontal Impact Protection
500 HP Cummins X12 Engine	10" Extended Painted Steel	48,000 Lb Meritor Axle	Generator Not Required		

MAX O.A.H. 11'-7.00"

NOTE

DIMENSIONS SHOWN ARE APPROXIMATE AND ARE SUBJECT TO MINOR DEVIATIONS AS MAY OCCUR OR BE NECESSARY IN CONSTRUCTION.
MINOR DETAILS NOT SHOWN.

1. NO LIMITED RETRACTION REQUIRED
2. SHORELINE RECEPTACLE WITH KUSSMAUL SUPER AUTO-EJECT LOCATED PER ORDER
3. AIR INLET WITH DISCONNECT COUPLING IN THE DRIVER SIDE STEPWELL
4. BATTERY CHARGER LOCATED PER ORDER
5. ONE ADJUSTABLE SHELVE LOCATED PER ORDER
6. SIX FLOOR MOUNTED SLIDE-OUT TRAYS LOCATED PER ORDER
7. 3.00" RAISED AERIAL PEDESTAL
8. LIFTING EYE ROPE RESCUE ATTACHMENT AT AERIAL TIP
9. BATTERY CHARGER INDICATOR LOCATED ON DRIVER'S SEAT RISER
10 WHEEL CHOCK BRACKETS PROVIDED BY DEPARTMENT
11. SEVEN SLIDE-OUT TRAY PER ORDER
12. TWO SLIDE-OUT (FULL TRANS) TOOLBOARDS PER ORDER
13. SIX 120V RECEPTACLES PER ORDER
14. RUNG LIGHTS ON AERIAL LADDER PER ORDER
15. TWO FLOOR EXTENTIONS PER ORDER
16. ONSPOT TIRE CHAINS

REV	DATE	BY	CH
B	24JAN25	LWE	JLL
A	18NOV24	LWE	JLL

CHASSIS DATA
MAKE: PIERCE
MODEL: ENFORCER

Pierce MANUFACTURING INC.

TITLE: 100' HSL AERIAL LADDER & BODY ASSEMBLY
-
FOR: LOWELL FIRE DEPARTMENT
LOWELL, MA
DWG NO.: 40775AD

JOB NO.	40775
SCALE	1:24
DATE	
DRAWN BY	LWE
	25AUG23
CHECKED BY	NDA
	30AUG23
SHEET SIZE	D
SHEET NO.	1 OF 1

View File Created 27-JAN-2025 11:08:16