PUMPER

BODY
Long Aluminum 2nd Gen Pumper

CHASSIS
Enforcer Chassis

CHASSIS

AXLE, FRONT, CUSTOM
18,000 lb Dana Axle

AXLE, REAR
24,000 lb Meritor Axle

ENGINE
450 HP Cummins L9 Engine

TRANSMISSION
Allison 6th Gen, 3000 EVS P

BUMPER
26" Extended Polished Stainless Steel

CAB
7010 Enforcer Cab

BODY

TOTAL TANK CAPACITY
750 Gallon New York Style Poly Tank

WATER CAPACITY
750 Gallons of Water

FOAM CELL
Foam Cell Not Required

COMPT, PUMPER, REAR
30.75" FF Rollup Rear Compt

COMPT, PUMPER, LEFT SIDE
161" Rollup Full Height Front & Rear FDLER

COMPT, PUMPER, RIGHT SIDE
161" Rollup Full Height Front & Rear FDLER

FIRE SUPPRESSION

PUMPHOUSE
52" Control Zone Side Mount

PUMP
1500 GPM Waterous CXC22

CROSSLAYS, 1.50"
1.50" Crosslays Not Required

CROSSLAYS, 2.50"
2.50" Crosslay Not Required

SPEEDLAYS
(2) 1.50", (1) 2.50" W/Tray Std. Capacity

GENERATOR
Generator Not Required

FOAM SYSTEM
Foam System Not Required

SAFETY

Not Required

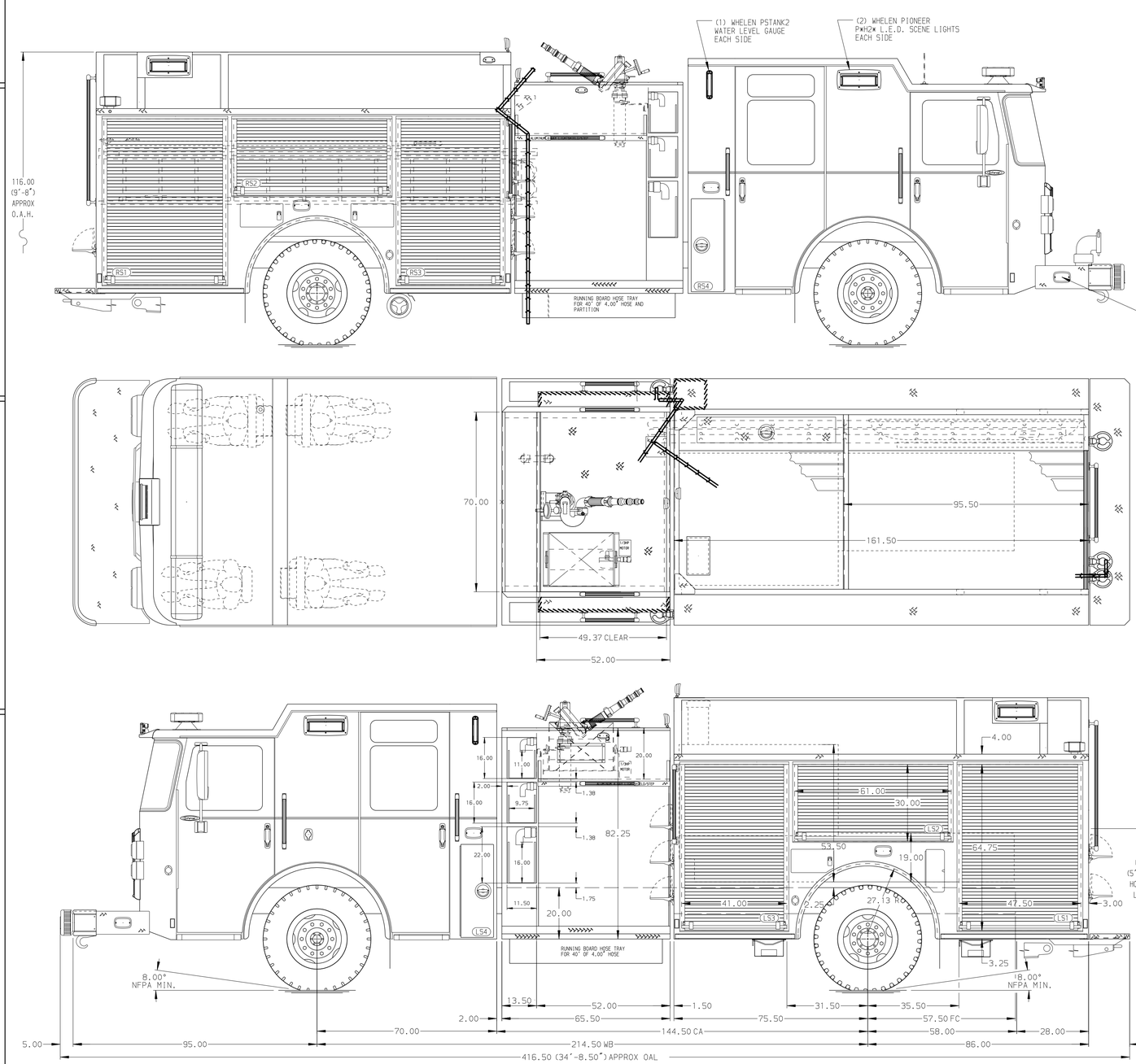

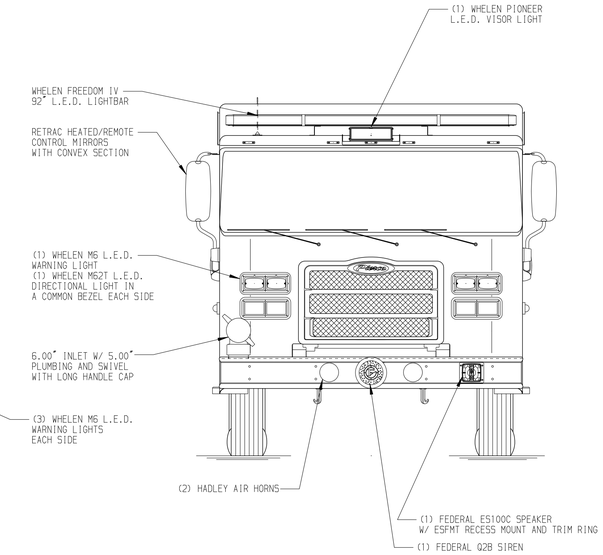

HOSEBED CAPACITY

BED 1
300' OF 1.75" D.J. POLY HOSE

BED 2
1000' OF 4.00" D.J. POLY HOSE

BED 3
1000' OF 2.50" D.J. POLY HOSE

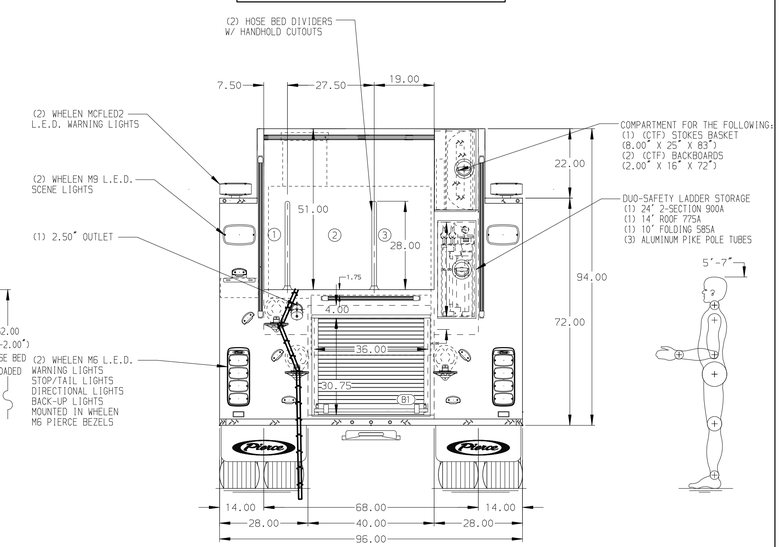

NOTE

DIMENSIONS SHOWN ARE APPROXIMATE AND ARE SUBJECT TO MINOR DEVIATIONS AS MAY OCCUR OR BE NECESSARY IN CONSTRUCTION.
MINOR DETAILS NOT SHOWN.

1. SHORELINE RECEPTACLE WITH KUSSMAUL SUPER AUTO-EJECT LOCATED ON DRIVER SIDE OF THE CAB
2. ONE SWING-OUT PEGBOARD TOOLBOARD LOCATED PER ORDER
3. BATTERY CHARGER/ AIR COMPRESSOR LOCATED BEHIND DRIVER'S SEAT
4. BATTERY CHARGE INDICATOR LOCATED ON DRIVER SEAT RISER
5. EIGHT ADJUSTABLE SHELVES LOCATED PER ORDER
6. FOUR FLOOR MOUNTED SLIDE-OUT TRAYS LOCATED PER ORDER
7. THREE ALUMINUM PEGBOARDS ON THE BACKWALL LOCATED PER ORDER
8. HANNAY MODEL SBEF 32-21-22-8 BOOSTER REEL FOR 150' OF 1.00" HOSE IN THE LEFT SIDE OF THE CARGO AREA

REV	DATE	BY	CH
7	01MAY25	LST	ZWE
6	20FEB25	LST	ZWE
5	21JAN25	LST	ZWE
4	12DEC24	LST	ZWE

CHASSIS DATA
MAKE: PIERCE
MODEL: ENFORCER

Pierce MANUFACTURING INC.

TITLE: Pierce Pumper Approval Drawing
FOR: Village of Midlothian Fire Department
DWG NO.: 40780AD

JOB NO.	40780
SCALE	1:24
DATE	220CT24
DRAWN BY	LST
CHECKED BY	MMF
230CT24	
SHEET SIZE	D
SHEET NO.	1 OF 1

View File Created 01-MAY-2025 08:54:48