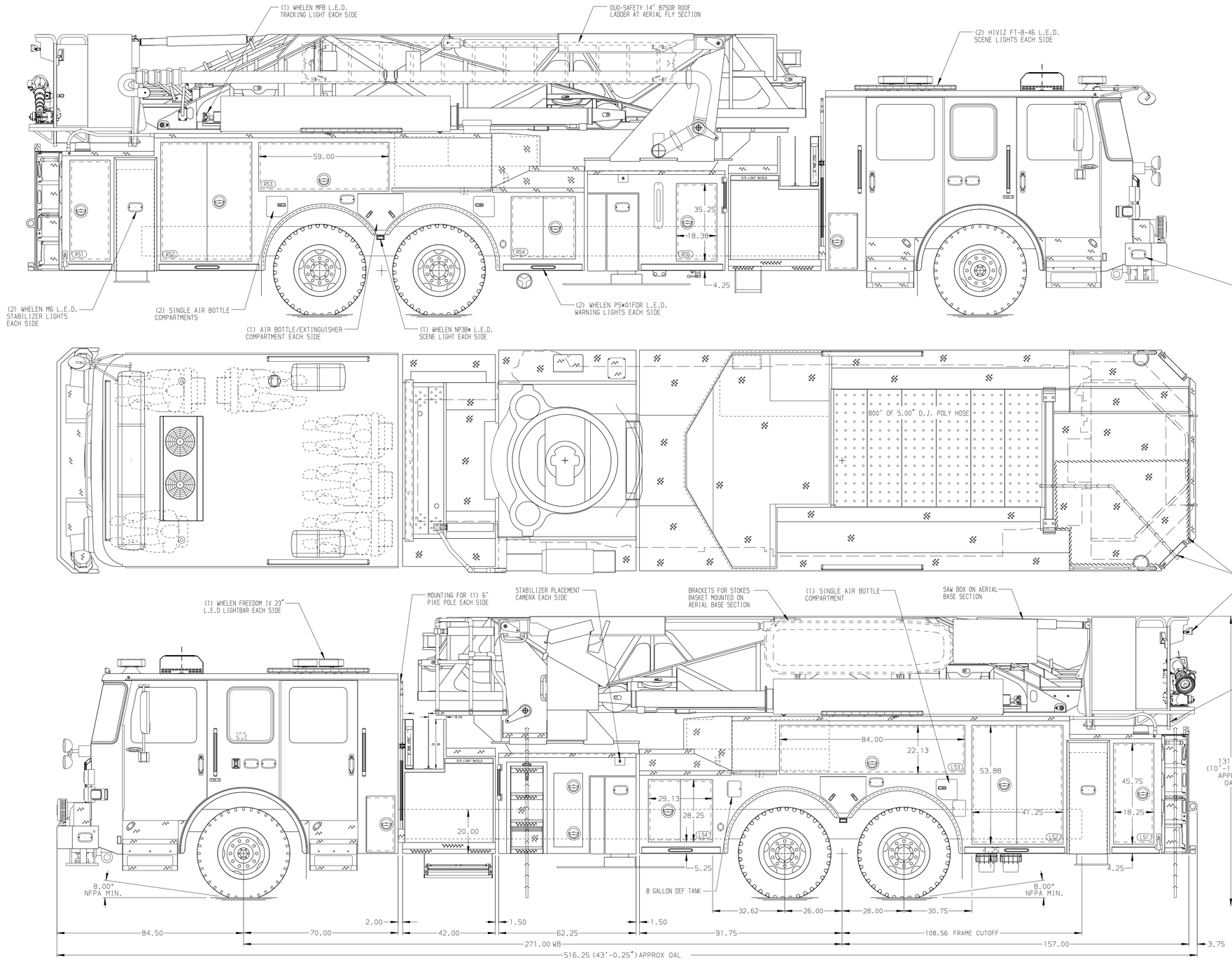

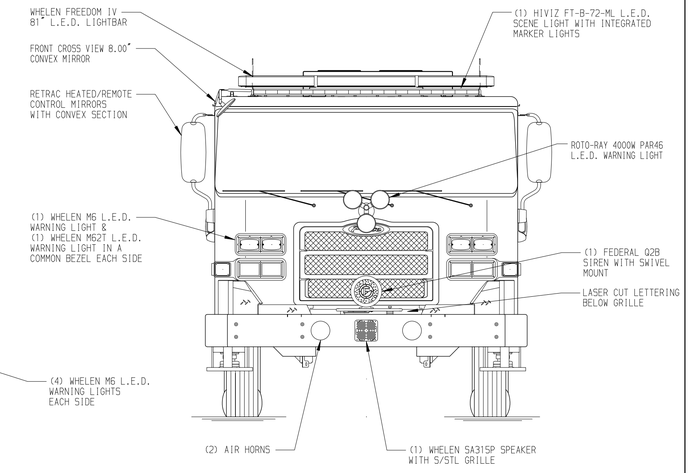

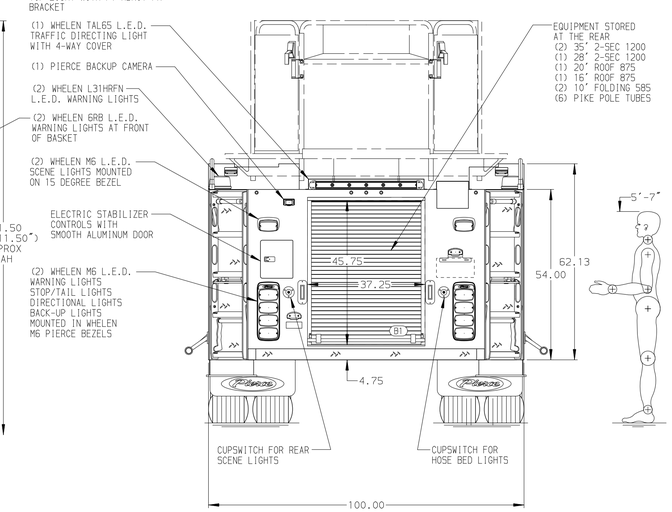

BODY	TOTAL TANK CAPACITY
100' Ascendant Aerial Tower Alum Body	300 Gallon Poly Tank
COMPT,LEFT SIDE	**WATER CAPACITY**
Full Height & Full Depth Lap Doors	300 Gallons of Water
COMPT,RIGHT SIDE	**FOAM CELL CAPACITY**
Full Height Lap Doors	Foam Cell Not Required
	FOAM SYSTEM
	Foam System Not Required

CHASSIS	CAB	AXLE,FRONT,CUSTOM	TRANSMISSION	PUMPHOUSE	CROSSLAYS,1.50"	SPEEDLAYS	SAFETY
Enforcer Chassis	7000 Enforcer Cab	24,000 Lb TAK-4 Axle	ALlison 6th Gen, 4000 EVS P	42" Control Zone Side Mount	(2) 1.50", 200' Of 1.75" Hose	Speedlays Not Required	Side Roll and Frontal Impact Protection
ENGINE	**BUMPER**	**AXLE,REAR**		**PUMP**	**CROSSLAYS,2.50"**	**GENERATOR**	
605 HP Cummins X15 Engine	15" Painted Aluminum	54,000 Lb Meritor Axle		2000 GPM Waterous S100	2.50" Crosslay Not Required	Generator Not Required	

NOTE

DIMENSIONS SHOWN ARE APPROXIMATE AND ARE SUBJECT TO MINOR DEVIATIONS AS MAY OCCUR OR BE NECESSARY IN CONSTRUCTION.
MINOR DETAILS NOT SHOWN.

1. SHORELINE RECEPTACLE WITH BLUE SEA SURE EJECT LOCATED ON DRIVER SIDE OF THE CAB
2. ONE TILT/SLIDE-OUT TRAY LOCATED IN COMPARTMENT PER ORDER
3. BATTERY CHARGER LOCATED BEHIND DRIVER SEAT
4. BATTERY CHARGE INDICATOR DISPLAYED THROUGH WINDOW BEHIND DRIVER SEAT
5. THREE ADJUSTABLE SHELVES LOCATED IN COMPARTMENTS PER ORDER
6. TWO FLOOR MOUNTED SLIDE-OUT TRAYS LOCATED IN COMPARTMENTS PER ORDER
7. ONE VERTICAL PARTITION LOCATED IN COMPARTMENT PER ORDER
8. TWO RECEPTACLE STRIPS LOCATED PER ORDER
9. TWO HIVIZ FT-MB-12-TR L.E.D. LIGHTS UNDER BASKET CORNER STEPS
10. DC POWER TO AERIAL TIP
11. 3-in-1 LYFECOMBO BRACKETS AT AERIAL BASKET
12. NON-RAISED AERIAL PEDESTAL
13. TECNIQ RUNG LIGHTING AT AERIAL DEVICE

REV	DATE	BY	CH
2	09SEP24	ANZ	JGO
1	17JUL24	ANZ	JGO

CHASSIS DATA
MAKE: PIERCE
MODEL: ENFORCER

Pierce MANUFACTURING INC.

TITLE: 100' ASCENDANT AERIAL TOWER AND BODY ASSEMBLY
FOR: ELON FIRE DEPARTMENT, ELON, NC
DWG NO.: 40784AD

JOB NO.	40784
SCALE 1:24	DATE
DRAWN BY ANZ	24APR24
CHECKED BY NAK	26APR24
SHEET SIZE D	SHEET NO. 1 OF 1

View File Created 16-SEP-2024 14:18:19