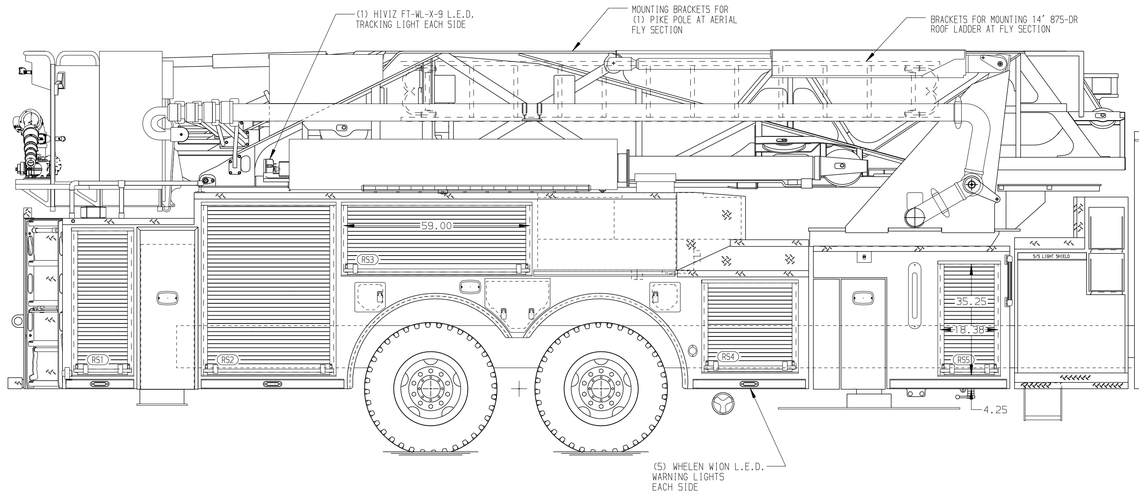

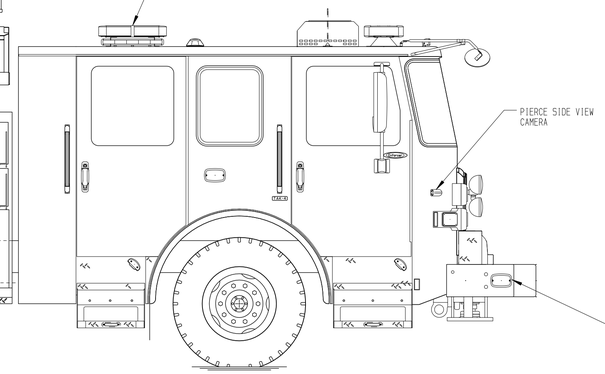

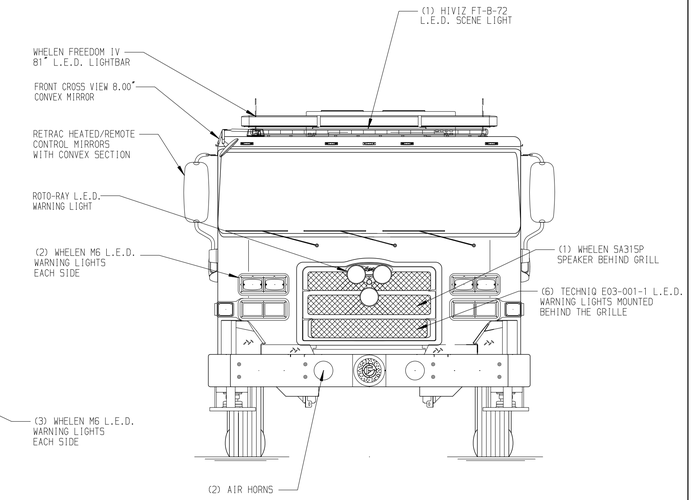

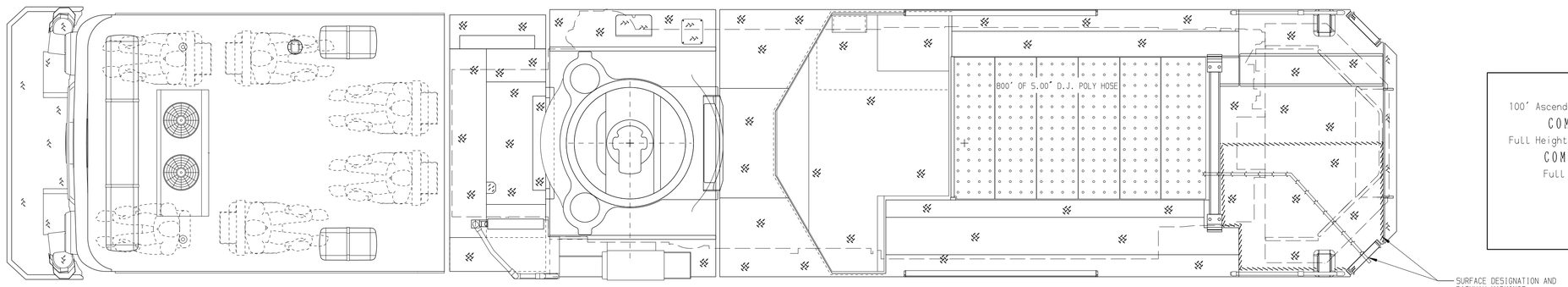

BODY	TOTAL TANK CAPACITY
100' Ascendant Aerial Tower Alum Body	300 Gallon Poly Tank
COMPT,LEFT SIDE	WATER CAPACITY
Full Height & Full Depth Rollup Doors	300 Gallons of Water
COMPT,RIGHT SIDE	FOAM CELL CAPACITY
Full Height Rollup Doors	Foam Cell Not Required
	FOAM SYSTEM
	Foam System Not Required

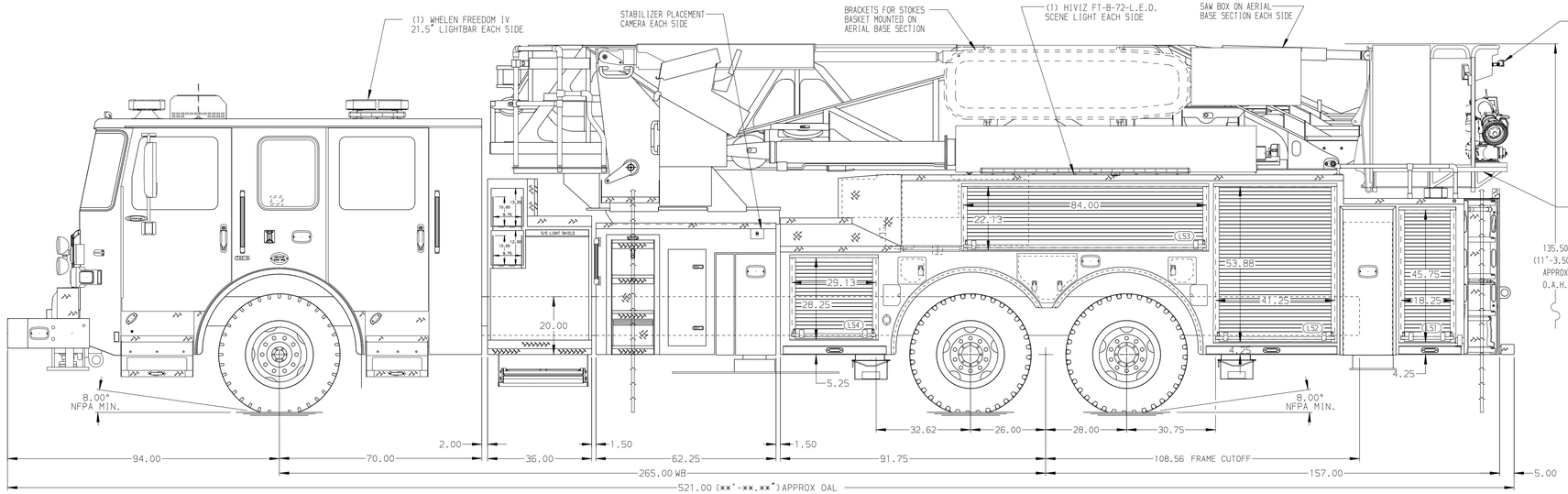

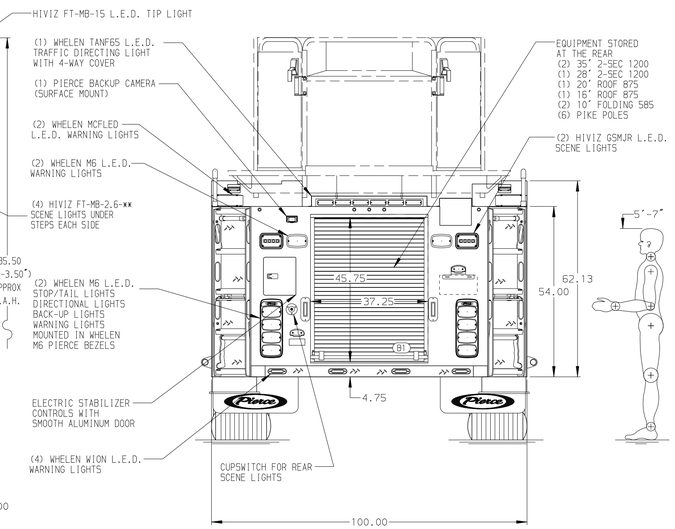

CHASSIS	CAB	AXLE,FRONT,CUSTOM	TRANSMISSION	PUMPHOUSE	CROSSLAYS,1.50"	SPEEDLAYS	SAFETY
Enforcer Chassis	7000 Enforcer Cab	24,000 Lb TAK-4 Axle	ALlison 6th Gen, 4000 EVS P	36" Control Zone Side Mount	(2) 1.50",With Trays,200'	Speedlays Not Required	Side Roll and Frontal Impact Protection
ENGINE	BUMPER	AXLE,REAR		PUMP	CROSSLAYS,2.50"	GENERATOR	
605 HP Cummins X15 Engine	24" Painted Aluminum	52,640 Lb TAK-4 Axle, REAR STEER		2000 GPM Waterous S100	2.50" Crosslay Not Required	Generator Not Required	

NOTE

DIMENSIONS SHOWN ARE APPROXIMATE AND ARE SUBJECT TO MINOR DEVIATIONS AS MAY OCCUR OR BE NECESSARY IN CONSTRUCTION.
MINOR DETAILS NOT SHOWN.

1. SHORELINE RECEPTACLE WITH BLUE SEA SURE EJECT LOCATED ON DRIVER SIDE OF THE CAB
2. AIR INLET WITH DISCONNECT COUPLING IN THE DRIVER SIDE STEPWELL
3. BATTERY CHARGER LOCATED PER ORDER
4. BATTERY CHARGE INDICATOR LOCATED PER ORDER
5. TWO ADJUSTABLE SHELVES LOCATED PER ORDER
6. NON-RAISED AERIAL PEDESTAL
7. 3-in-1 LYFECOMBO BRACKETS AT AERIAL BASKET
8. THREE FLOOR MOUNTED SLIDE-OUT TRAYS PER ORDER
9. RUNG LIGHTING ON AERIAL LADDER PER ORDER
10. DC POWER TO AERIAL TIP
11. ONE CETECH (4) DRAWER CABINET PER ORDER
12. TWO SLIDE-OUT TOOLBOARD PER ORDER
13. ONE SWING-OUT TOOLBOARD PER ORDER
14. PAC TRACK ON BACK WALL OF COMPARTMENTS PER ORDER
15. ONE 120V RECEPTACLE PER ORDER

REV	DATE	BY	CH
V	07MAR25	LWE	ZWE
V	04NOV24	LWE	ZWE
V	25OCT24	LWE	ZWE
V	19SEPT24	LWE	ZWE
V	17SEPT24	LWE	ZWE

CHASSIS DATA — MAKE: PIERCE — MODEL: ENFORCER

Pierce MANUFACTURING INC.

TITLE: 100' ASCENDANT AERIAL TOWER AND BODY ASSEMBLY
–

FOR: ROCKY MOUNT FD
ROCKY MOUNT, VA

DWG NO. 40798AD

JOB NO.	40798
SCALE 1:24	DATE
DRAWN BY LWE	27JUN24
CHECKED BY JLO	02JUL24
SHEET SIZE D	SHEET NO. 1 OF 1

View File Created 07-MAR-2025 13:37:30