PUMPER

BODY
Long Aluminum 2nd Gen Pumper

CHASSIS
Saber FR Chassis

CHASSIS

AXLE, FRONT, CUSTOM
20,000 lb Meritor Axle

AXLE, REAR
27,000 lb Meritor Axle

ENGINE
450 HP Cummins L9 Engine

TRANSMISSION
Allison 6th Gen, 3000 EVS P

BUMPER
22" Extended Painted Steel

CAB
7010 Saber FR Cab

BODY

TOTAL TANK CAPACITY
750 Gallon New York Style Poly Tank

WATER CAPACITY
725 Gallons of Water

FOAM CELL
25 Gallon Foam Cell

COMPT, PUMPER, REAR
23.50" FF RollUp Rear Compt

COMPT, PUMPER, LEFT SIDE
171" RollUp Full Height & Depth Front & Rear

COMPT, PUMPER, RIGHT SIDE
171" RollUp Full Height & Depth Front & Rear

FIRE SUPPRESSION

PUMPHOUSE
45" Control Zone Side Mount

PUMP
1500 GPM Hale DSD

CROSSLAYS, 1.50"
(2) 1.50" Standard Capacity

CROSSLAYS, 2.50"
2.50" Crosslay Not Required

SPEEDLAYS
Speedlays Not Required

GENERATOR
Generator Not Required

FOAM SYSTEM
Foam System Not Required

SAFETY
Side Roll and Frontal Impact Protection

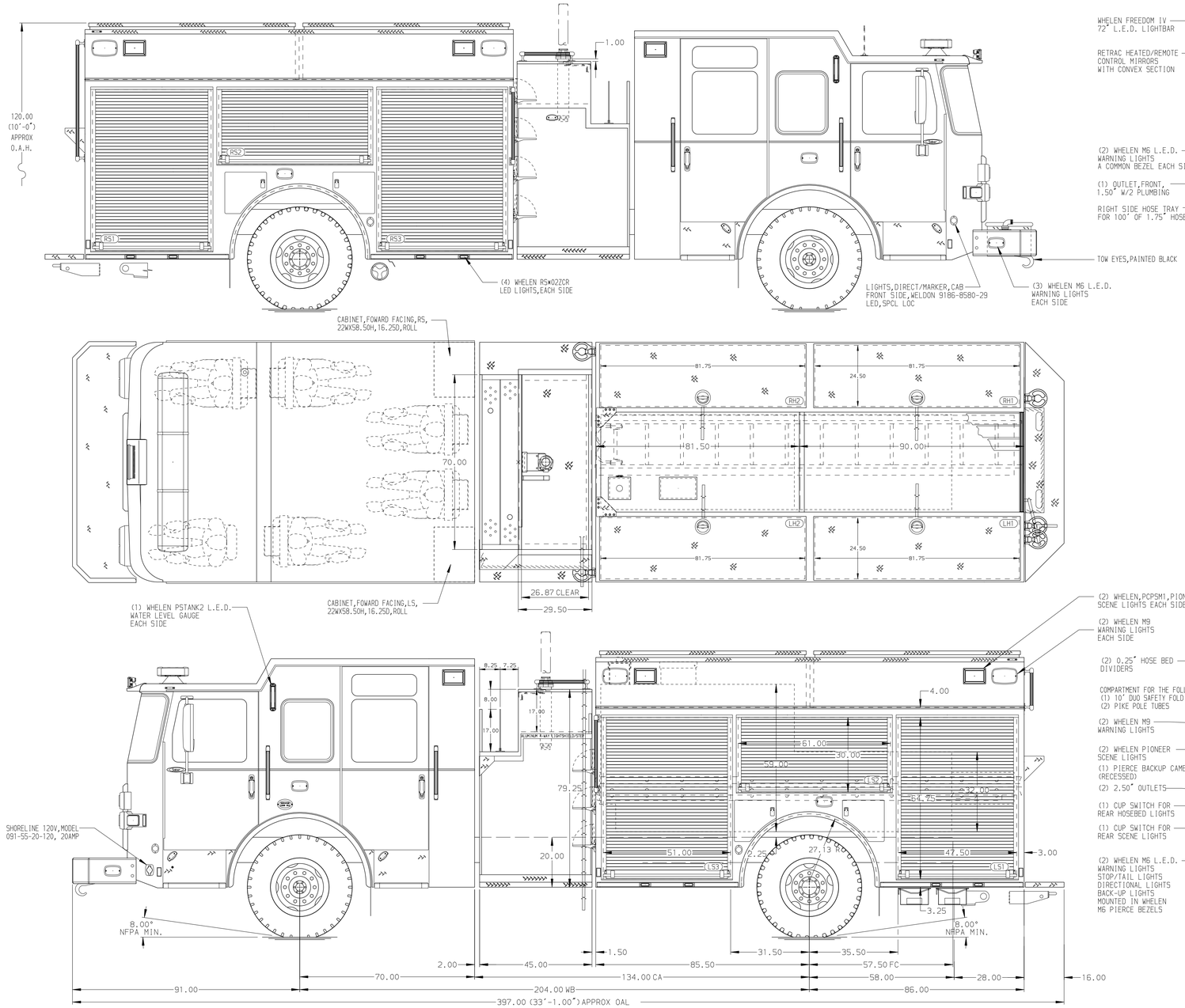

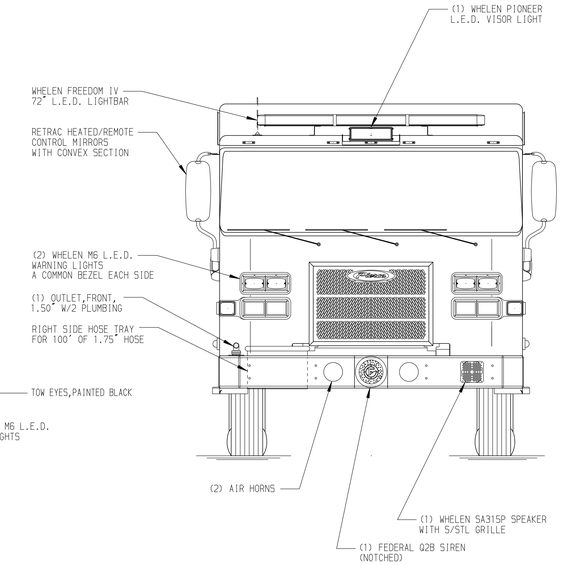

HOSEBED CAPACITY

BED 1
594' OF 5.00" MERCEDES HOSE

BED 2
297' OF 5.00" MERCEDES HOSE

BED 3
580' OF 3.00" MERCEDES HOSE

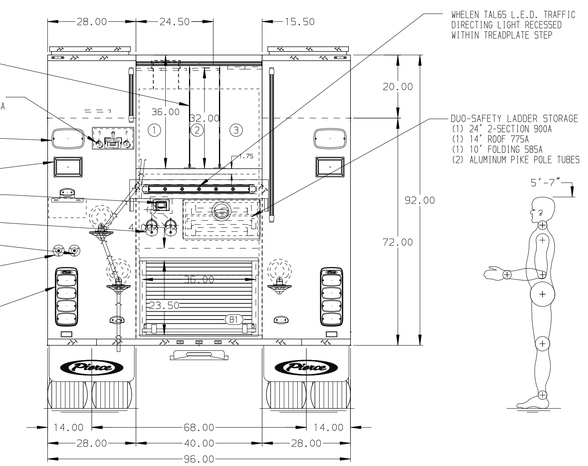

MAXIMUM O.A.H. 120.00"

NOTE
DIMENSIONS SHOWN ARE APPROXIMATE AND ARE SUBJECT TO MINOR DEVIATIONS AS MAY OCCUR OR BE NECESSARY IN CONSTRUCTION.
MINOR DETAILS NOT SHOWN.

REV	DATE	BY	CH
7	18FEB25	RHU	JAP
6	04NOV24	RHU	JAP
5	23AUG24	ADP	JAP
4	28JUN24	VHO	JAP

CHASSIS DATA	
MAKE	PIERCE
MODEL	SABER FR

Pierce MANUFACTURING INC.

TITLE	Pierce Pumper Approval Drawing –	JOB NO.	40800
		SCALE 1:24	DATE
FOR	Hopkinsville Fire Department –	DRAWN BY MMF	20MAY24
		CHECKED BY AMI	21MAY24
DWG NO.	40800AD	SHEET SIZE D	SHEET NO. 1 OF 1

View File Created 31-MAR-2025 10:37:46