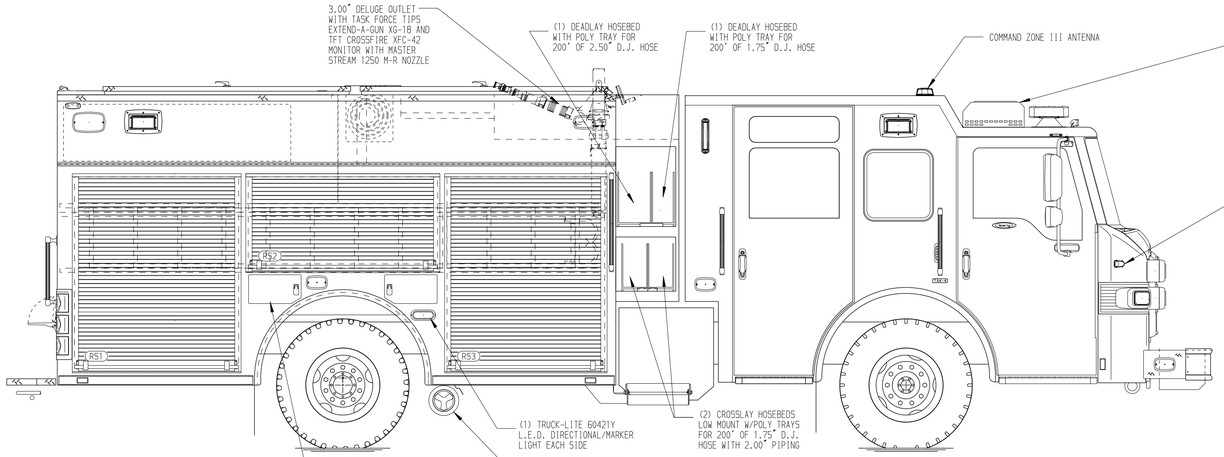

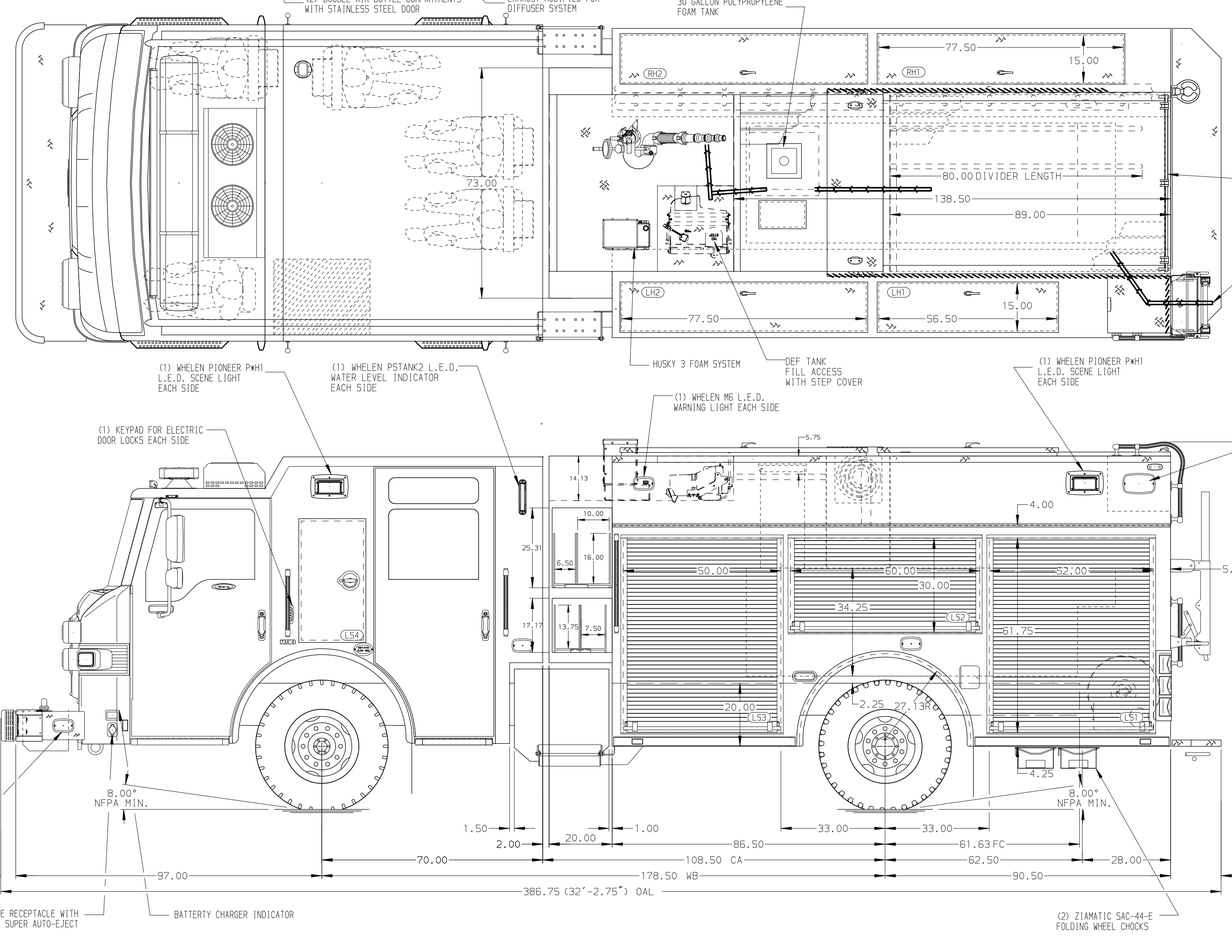

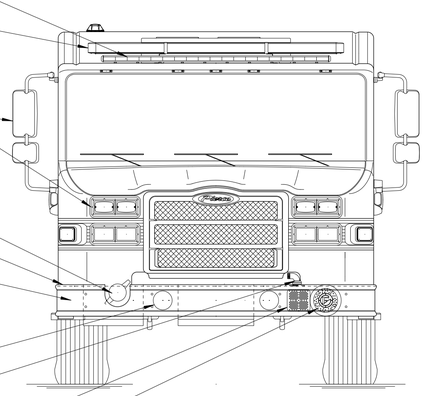

ALUMINUM BODY | MAXIMUM O.A.H. 120.00" | SIDE ROLL & FRONTAL IMPACT PROTECTION | REF 39997

NOTE

DIMENSIONS SHOWN ARE APPROXIMATE AND ARE SUBJECT TO MINOR DEVIATIONS AS MAY OCCUR OR BE NECESSARY IN CONSTRUCTION.
MINOR DETAILS NOT SHOWN.

1. S/STL SCUFFPLATE ON EACH CAB DOOR JAMB
2. S/STL SCUFFPLATE ON REAR OUTER CORNERS OF CAB
3. MOUNTING BASE FOR ANTENNA LOCATED PER SHOP ORDER
4. BATTERY CHARGER LOCATED IN CAB ON THE LEFT SIDE EMS COMPARTMENT WALL
5. PIERCE L.E.D. DUAL COMPARTMENT LIGHT STRIPS LOCATED PER SHOP ORDER
6. TWO I-ZONE BRACKETS LOCATED AT REAR PER THE SHOP ORDER
7. STORAGE TUBE FOR HYDRANT WRENCH AND RUBBER MALLET LOCATED ON THE FRONT BUMEPER PER SHOP ORDER

REV	DATE	BY	CH
2	24MAR26	JAM	-
1	23JAN26	JAM	SGH

CHASSIS DATA
MAKE: PIERCE
MODEL: VELOCITY

Pierce MANUFACTURING INC.

TITLE: 1500 GPM, 530 G TANK, 500 G WATER, 30 G FOAM TANK
177" PUC BODY, VELOCITY ESP ELECTRICAL SYSTEM
FOR: ANAHEIM FIRE DEPARTMENT
ANAHEIM, CALIFORNIA
DWG NO.: 40812AD-SH1

JOB NO.	40812
SCALE	1:24
DATE	
DRAWN BY	JAM 280CT25
CHECKED BY	SGH 26NOV25
SHEET SIZE	D
SHEET NO.	1 OF 2

View File Created 24-MAR-2026 09:56:05