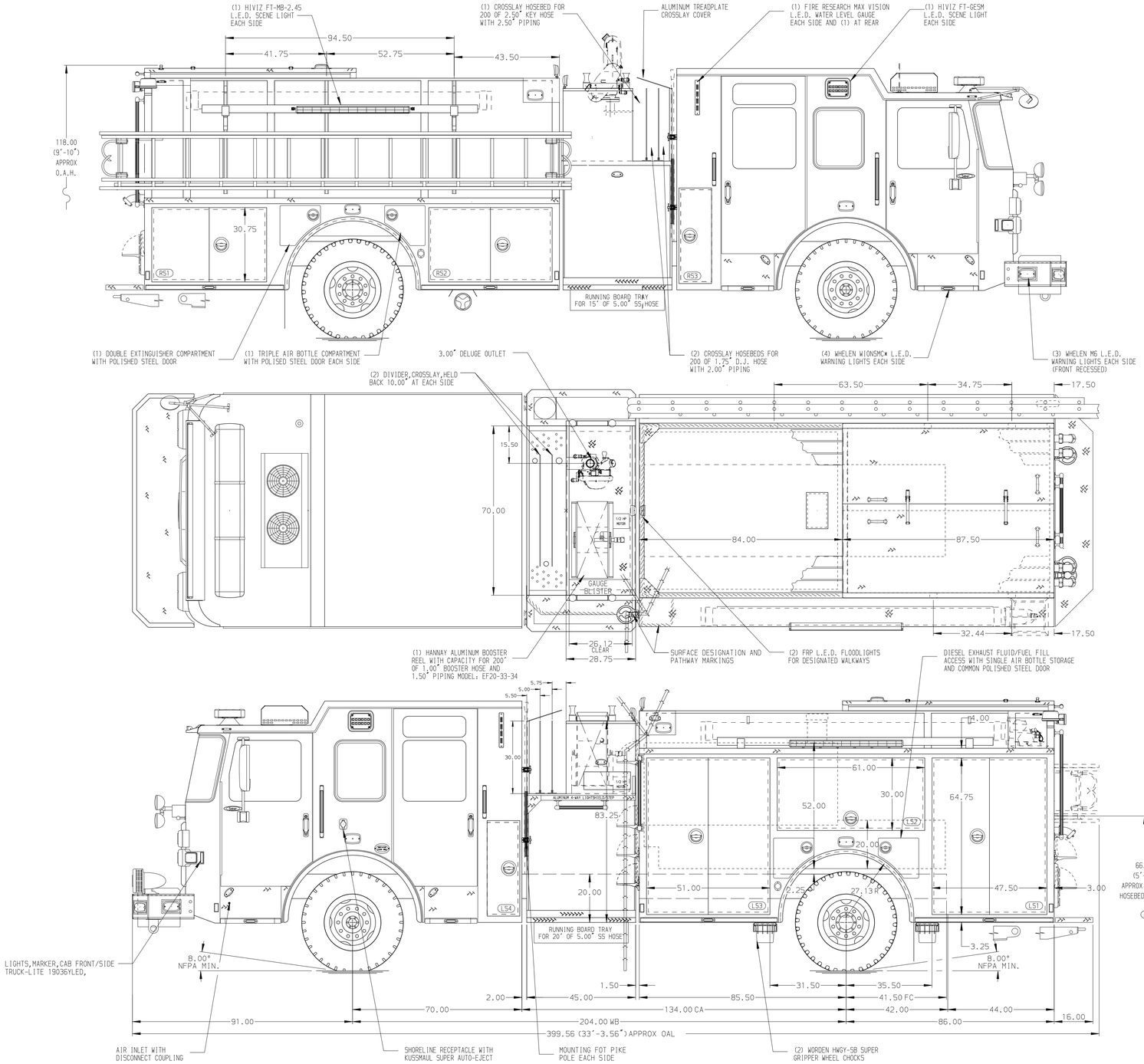


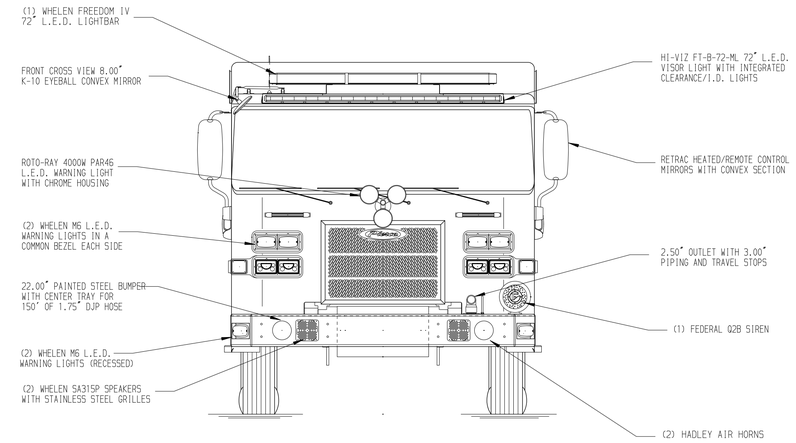


HOSEBED CAPACITIES

1. - 300' OF 2.00" D.J. POLY HOSE (SINGLE STACK)
2. - 300' OF 1.75" D.J. POLY HOSE (SINGLE STACK)
3. - 400' OF 1.75" D.J. POLY HOSE (DOUBLE STACK)
4. - 1000' OF 5.00" D.J. POLY HOSE
5. - 300' OF 3.00" D.J. POLY HOSE (SINGLE STACK)
6. - 300' OF 3.00" D.J. POLY HOSE (SINGLE STACK)

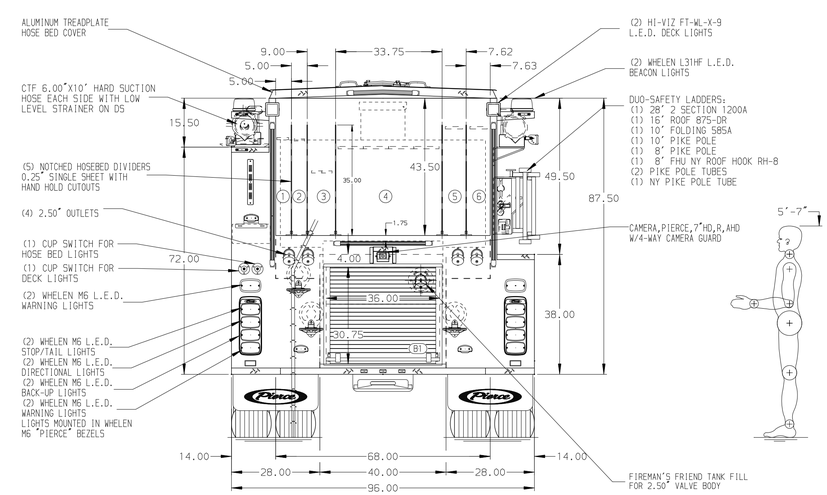


ALUMINUM BODY

MAXIMUM O.A.H. 118.00"

SIDE ROLL PROTECTION

NOTE

DIMENSIONS SHOWN ARE APPROXIMATE AND ARE SUBJECT TO MINOR DEVIATIONS AS MAY OCCUR OR BE NECESSARY IN CONSTRUCTION.
MINOR DETAILS NOT SHOWN.

| REV | DATE | BY | CH |
|---|---|---|---|
| 7 | 29MAY25 | VHO | CCS |
| 6 | 11DEC24 | VHO | CCS |
| 5 | 14OCT24 | RHU | CCS |
| 4 | 04SEP24 | JJB | CDU |

CHASSIS DATA
MAKE: PIERCE
MODEL: SABER FR

**Pierce MANUFACTURING INC.**

TITLE: 1500 GPM, 1000G WATER TANK
171" 2G PUMPER, HARD WIRED

FOR: NORLINA FIRE DEPARTMENT
NORLINA, NORTH CAROLINA

DWG NO.: 40814AD

| | |
|---|---|
| JOB NO. | 40814 |
| SCALE | 1:24 |
| DATE | |
| DRAWN BY | JJB |
| | 16AUG24 |
| CHECKED BY | CDU |
| | 20AUG24 |
| SHEET SIZE | D |
| SHEET NO. | 1 OF 1 |

View File Created 29-MAY-2025 08:08:16