RIGHT SIDE COMPARTMENTS CONTAIN THE FOLLOWING:

COMPARTMENT RS1 CONTAINS:
- (2) VERTICAL PEGBOARD DIVIDERS
- (7) STD DEPTH ADJ SHELVES
- (4) POLY TOOL BOXES
- (2) 15/20A,120V DUPLEX RECEPTACLES
- (1) HYDRAULIC TOOL TURNTABLE
-
-
-

COMPARTMENT RS2 CONTAINS:
- (1) STD DEPTH ADJ SLIDE OUT/TILT TRAY
- (1) 15/20A,120V 4-PLACE RECEPTACLE
-
-

COMPARTMENT RS3 CONTAINS:
- (1) SWING UP EQUIPMENT GUARD
-
-
-

COMPARTMENT RS4 CONTAINS:
- (1) VERTICAL PEGBOARD DIVIDER
- (4) STD DEPTH ADJ SHELVES
- (3) 1/2 DEPTH INVERTED S.O.TOOLBOARDS
- (5) POLY TOOL BOXES
-
-
-
-

COMPARTMENT RS5 CONTAINS:
- (1) CAB LIFT CONTROLLER
- (2) STD DEPTH ADJ SHELVES
- (2) 15/20A,120V DUPLEX RECEPTACLES
- (1) ELECTRIC CORD REEL WITH 200' OF 10/4 BLACK CORD
-

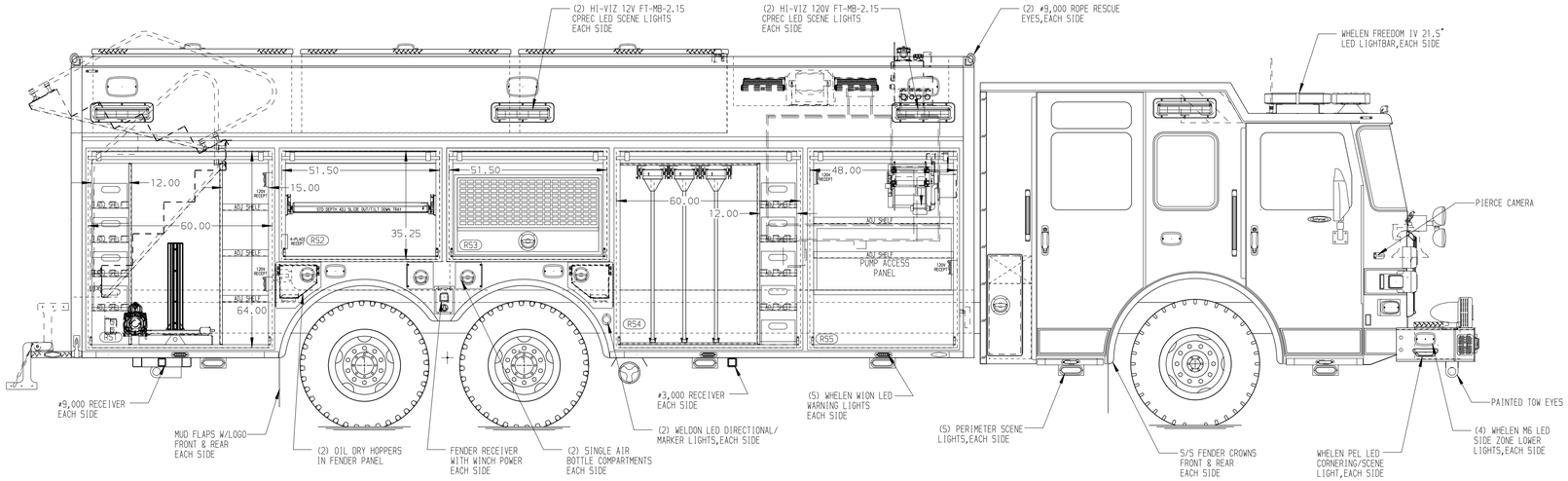

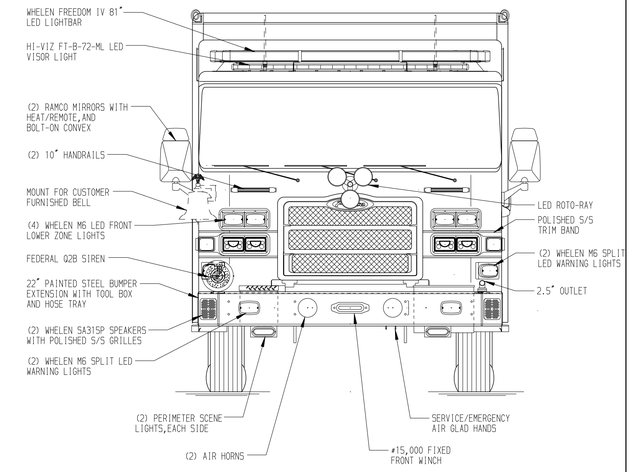

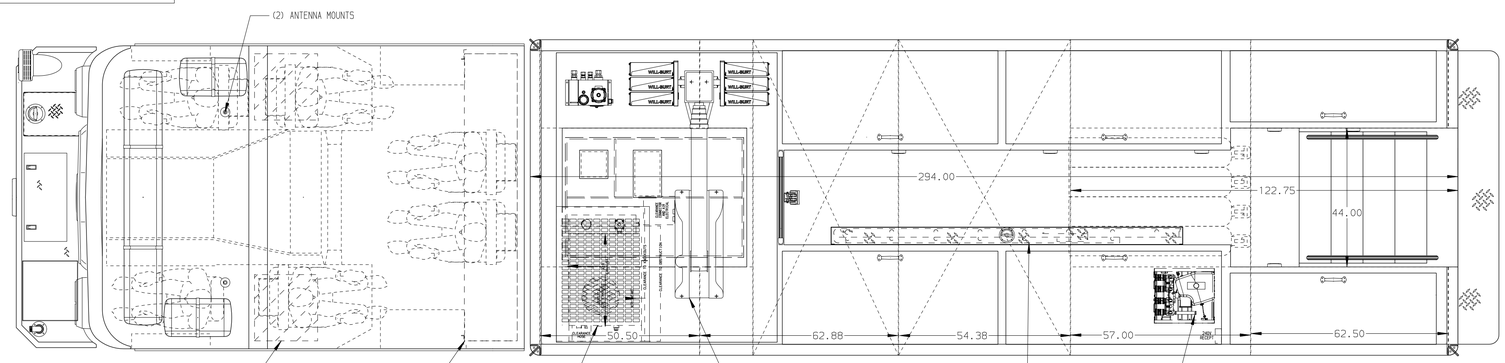

REAR COMPARTMENT CONTAINS THE FOLLOWING:

COMPARTMENT B1 CONTAINS:
- (1) FLAT TOP ADJUSTABLE SHELF
- (1) 90°DP ADJ ON-SCENE SLIDE OUT TRAY
- (4) 6000 UN AIR STORAGE BOTTLES
- (1) BREATHING AIR BOOSTER PUMP
-
-
-
-

COMPARTMENT B2 CONTAINS:
-
-
-

LEFT SIDE COMPARTMENTS CONTAIN THE FOLLOWING:

COMPARTMENT LS1 CONTAINS:
- (1) SLIDE OUT ROLLER GUIDE BRACKET
- (1) HORIZONTAL COMPARTMENT DIVIDER
- (2) VERTICAL PEGBOARD DIVIDERS
- (8) STD DEPTH ADJ SHELVES
- (6) POLY TOOL BOXES
- (1) 15/20A,120V DUPLEX RECEPTACLE
- (3) HYDRAULIC REELS WITH 100' OF HOSE
- (1) HYDRAULIC TOOL TURNTABLE
- (1) SWITCH FOR 30A, 240V RECEPTACLE

COMPARTMENT LS2 CONTAINS:
-
-
-
-

COMPARTMENT LS3 CONTAINS:
- (1) SWING UP EQUIPMENT GUARD
-
-
-

COMPARTMENT LS4 CONTAINS:
- (1) VERTICAL PEGBOARD DIVIDER
- (4) STD DEPTH ADJ SHELVES
- (2) 1/2 DEPTH INVERTED S.O.TOOLBOARDS
- (5) POLY TOOL BOXES
- (1) CASCADE SYSTEM CONTROL PANEL
- (1) "SPACESAVER"2-BOTTLE FILL ENCLOSURE
- (1) HIGH PRESSURE AIR REEL W/150' OF HOSE
-

COMPARTMENT LS5 CONTAINS:
- (1) KUSSMAUL 35/10 BATTERY CHARGER
- (1) VERTICAL PEGBOARD DIVIDER
- (1) 3-DRAWER TOOL CABINET
- (1) CIRCUIT BREAKER PANEL
- (1) GENERATOR METER PANEL
- (1) SUB FEED BOX
- (1) ELECTRIC CORD REEL WITH 200' OF 10/4 BLACK CORD
- (1) NIGHTSCAN CONTROLLER
- (1) 30A,240V T.L. RECEPTACLE

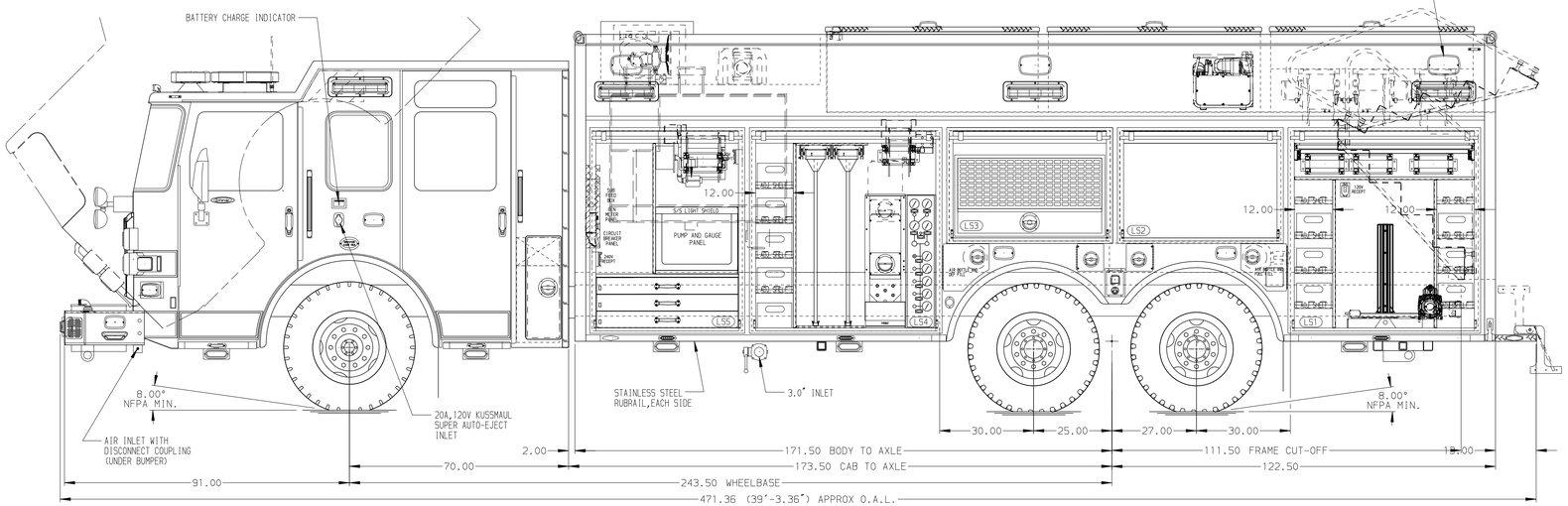

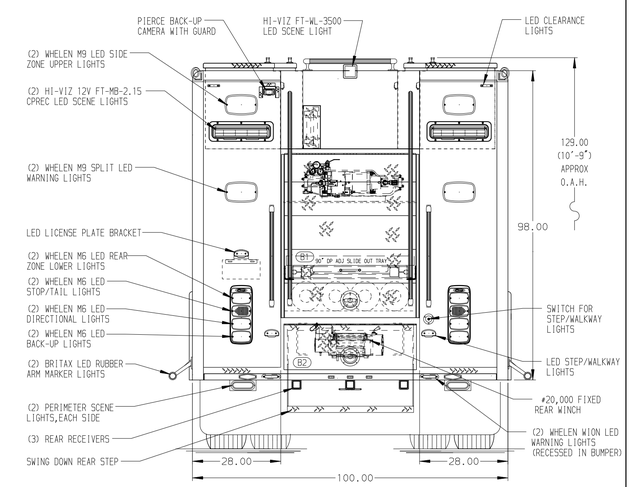

NOTE

DIMENSIONS SHOWN ARE APPROXIMATE AND ARE SUBJECT TO MINOR DEVIATIONS AS MAY OCCUR OR BE NECESSARY IN CONSTRUCTION.
MINOR DETAILS NOT SHOWN.

NOTES:
1. WATEROUS CPK-2, 300 GPM PUMP
2. POLISHED S/S SCUFFPLATES ON CAB AND CREW CAB DOOR JAMBS
3. POLISHED S/S SCUFFPLATES ON REAR CORNERS OF CAB
4. PAC TRAC INSTALLED ON THE OUTBOARD REAR WALLS OF THE CREW CAB
5. THERE IS A SHELF MOUNTED ON THE REAR WALL OF THE CREW CAB ABOVE THE FORWARD FACING SEATS
6. FLOOR IN CAB AND CREW CAB TO BE PADDED RUBBER
7. (2) #9,000 PINNABLE ROPE ANCHORS
8. S/S GUARDS LOCATED ON ALL BODY ROLL-UP DOORS
9. ELASTIC STRAPS ON ALL BODY ROLL-UP DOORS
10. PIERCE LED LIGHTS ON IN ALL BODY AND HATCH COMPARTMENTS
11. 15/20A,120V DUPLEX RECEPTACLE LOCATED BEHIND DRIVER AND OFFICER'S SEATS
12. 30A,240V T.L. RECEPTACLE LOCATED IN THE HATCH COMPARTMENT ABOVE LS2

SIDE ROLL AND FRONTAL IMPACT PROTECTION

CLEAR DOOR WIDTH KEY	
AMDOR ROLL UP DOORS:	-2 1/4"
GORTITE ROLL UP DOORS:	-2 1/2"
PIERCE DOUBLE LAP DOORS:	-4 1/4"
PIERCE LIFT-UP LAP DOORS:	-1 1/2"
(EX: 60"F-F - 2 1/4"= 57 3/4" CLEAR) (F-F)= FRAME TO FRAME	

REV	DATE	BY	CH
5	25JUL25	DHE	AZU
4	27MAY25	DHE	AZU
3	27MAY25	DHE	AZU
2	14MAR25	DHE	AZU
1	20DEC24	DHE	GFI

CHASSIS DATA: MAKE PIERCE; MODEL EN7010

Pierce MANUFACTURING INC.

TITLE: HEAVY DUTY RESCUE
NON-WALKIN WITH 300 GAL WATER, 20 GAL FOAM TANK

FOR: BERLIN FIRE COMPANY — BID #723
ATLANTIC EMERGENCY SOLUTIONS,INC — RANDY SCHWARTZ

DWG NO.: 40815AD

JOB NO.	40815
SCALE	1:24
DATE	20NOV24
DRAWN BY	DHE
CHECKED BY	GFI
DATE	22NOV24
SHEET SIZE	D
SHEET NO.	1 OF 1

View File Created 25-JUL-2025 09:03:10