# PUMPER

## BODY
Short Aluminum 2nd Gen Pumper

## CHASSIS
Enforcer Chassis

# CHASSIS

## AXLE, FRONT, CUSTOM
20,000 lb Dana Axle

## AXLE, REAR
24,000 lb Dana Axle

## ENGINE
450 HP Cummins L9 Engine

## TRANSMISSION
Allison 6th Gen, 3000 EVS P

## BUMPER
19" Extended Painted Steel

## CAB
7000 Enforcer Cab

# BODY

## TOTAL TANK CAPACITY
500 Gallon New York Style Poly Tank

## WATER CAPACITY
500 Gallons of Water

## FOAM CELL
Foam Cell Not Required

## COMPT, PUMPER, REAR
30.75" FF RollUp Rear Compt

## COMPT, PUMPER, LEFT SIDE
140" Lap Full Height Front & Rear FDLER
Double Door Over Wheel

## COMPT, PUMPER, RIGHT SIDE
140" Lap Low FDLER

# FIRE SUPPRESSION

## PUMPHOUSE
45" Control Zone Side Mount

## PUMP
1250 GPM Waterous CMU

## CROSSLAYS, 1.50"
Crosslays Not Required

## CROSSLAYS, 2.50"
Crosslays Not Required

## SPEEDLAYS
Speedlays Not Required

## GENERATOR
Generator Not Required

## FOAM SYSTEM
Foam System Not Required

# SAFETY

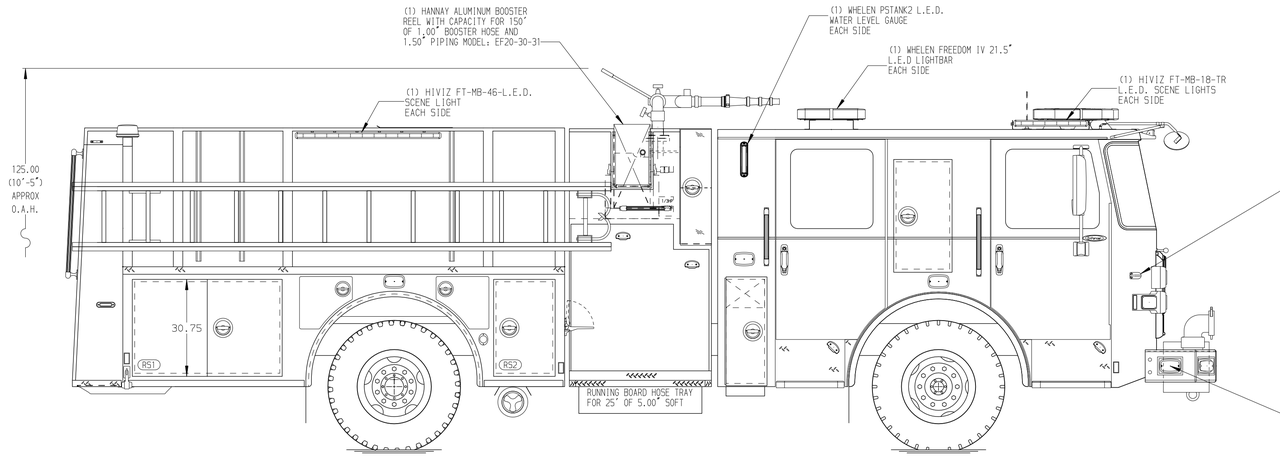


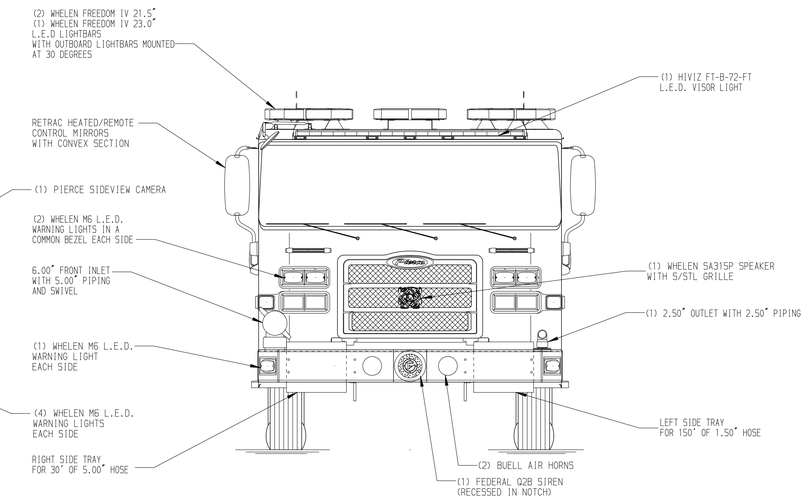


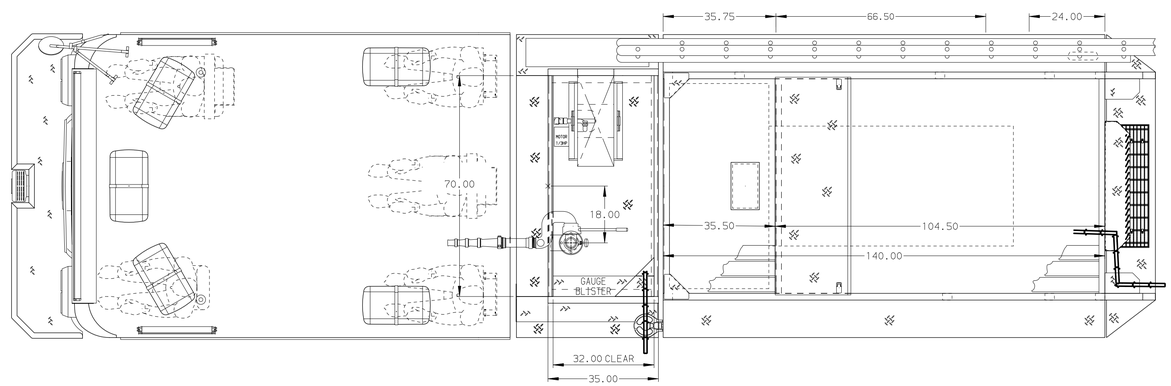


## HOSEBED CAPACITY

**BED 1**
200' OF 1.75" MERCEDES HOSE

**BED 2**
200' OF 1.75" MERCEDES HOSE

**BED 3**
1000' OF 5.00" MERCEDES HOSE

**BED 4**
500' OF 3.00" MERCEDES HOSE

**BED 5**
200' OF 2.50" MERCEDES HOSE

**BED 6**
300' OF 1.75" MERCEDES HOSE

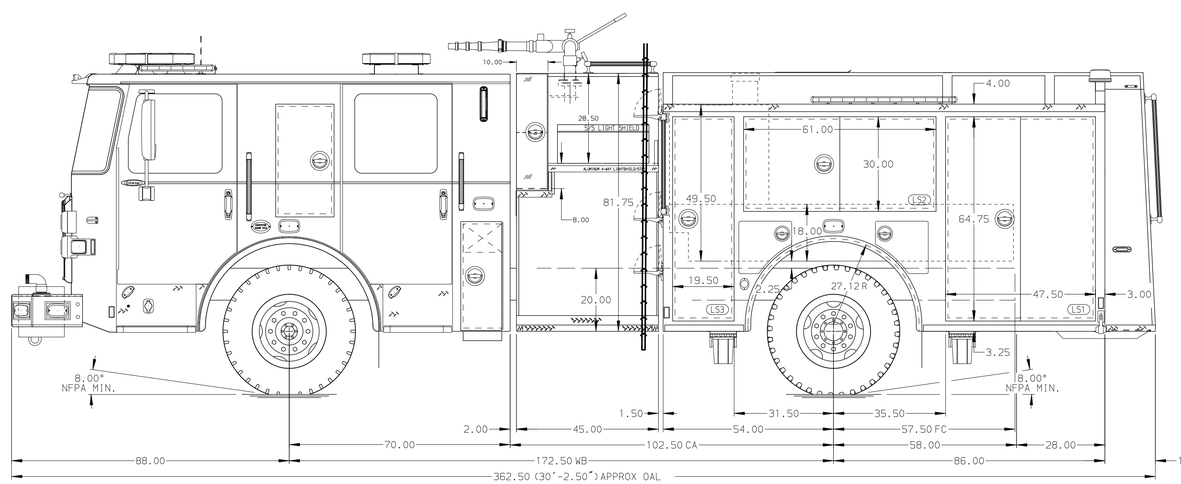


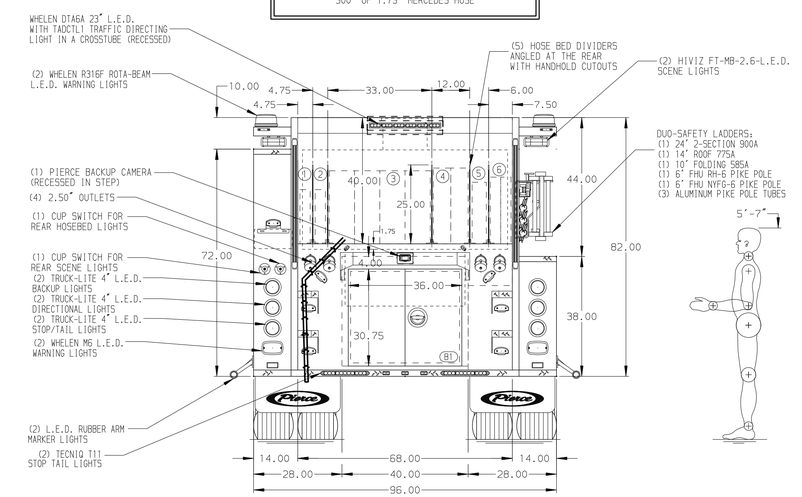


NOTE
DIMENSIONS SHOWN ARE APPROXIMATE AND ARE SUBJECT TO MINOR DEVIATIONS AS MAY OCCUR OR BE NECESSARY IN CONSTRUCTION.
MINOR DETAILS NOT SHOWN.

1. SHORELINE RECEPTACLE WITH KUSSMAUL SUPER AUTO-EJECT LOCATED IN THE DRIVER SIDE STEPWELL
2. AIR INLET WITH DISCONNECT COUPLING IN THE DRIVER SIDE STEPWELL
3. BATTERY CHARGER LOCATED PER ORDER
4. BATTERY CHARGE INDICATOR LOCATED ON DRIVER SEAT RISER

| REV | DATE | BY | CH |
|---|---|---|---|
| V | 10MAR25 | JWR | GKH |
| B | 31JAN25 | JAM | GKH |
| A | 10DEC24 | JAM | MMF |

CHASSIS DATA
MAKE: PIERCE
MODEL: ENFORCER

**Pierce MANUFACTURING INC.**

| | | | |
|---|---|---|---|
| TITLE | Pierce Pumper Approval Drawing<br>- | JOB NO. | 40817 |
| | | SCALE 1:24 | DATE |
| FOR | City of Chester<br>- | DRAWN BY JAM | 01DEC24 |
| | | CHECKED BY MMF | 03DEC24 |
| DWG NO. | 40817AD | SHEET SIZE D | SHEET NO. 1 OF 1 |

View File Created 17-MAR-2025 06:54:34