PUMPER

BODY
Long Aluminum 2nd Gen Pumper

CHASSIS
Velocity Chassis (Big Block)

ELECTRICAL SYSTEM
MUX

CHASSIS

AXLE, FRONT, CUSTOM
23,000 Lb Dana Axle

AXLE, REAR
27,000 Lb Meritor Axle

ENGINE
510 HP Paccar MX13 Engine

TRANSMISSION
Allison 6th Gen, 4000 EVS P

BUMPER
26" Extended Steel

CAB
7010 Velocity FR Cab

BODY

TOTAL TANK CAPACITY
1000 Gallon New York Style Poly Tank

WATER CAPACITY
1000 Gallons of Water

FOAM CELL CAPACITY
25 Gallons of Foam

COMPT, PUMPER, REAR
37.75" FF Rollup Rear Compt

COMPT, PUMPER, LEFT SIDE
171" Rollup Full Height Front & Rear FDLER

COMPT, PUMPER, RIGHT SIDE
171" Rollup Full Height Front & Rear FDLER

FIRE SUPPRESSION

PUMPHOUSE
45" Control Zone Side Mount

PUMP
1500 GPM Waterous CSU

CROSSLAYS, 1.50"
1.50" Crosslays Not Required

CROSSLAYS, 2.50"
2.50" Crosslay Not Required

SPEEDLAYS
(2) 200' of 1.75" W/Tray

GENERATOR
Generator Not Required

FOAM SYSTEM
FoamPro 1600 (Single Agent)

SAFETY
Not Required, Side Roll and Frontal Impact Protection

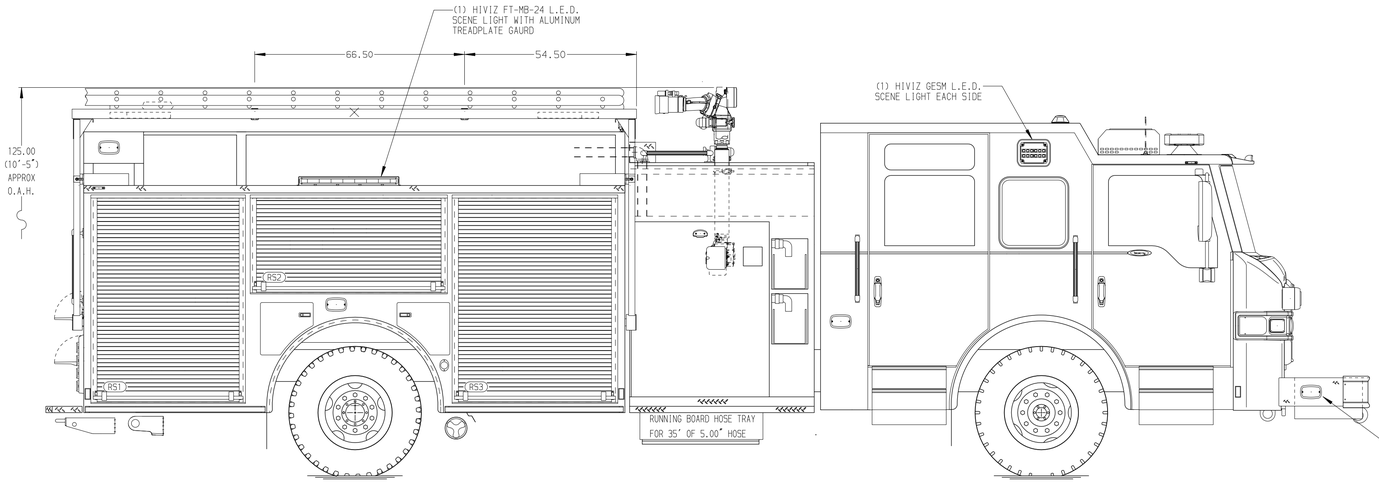

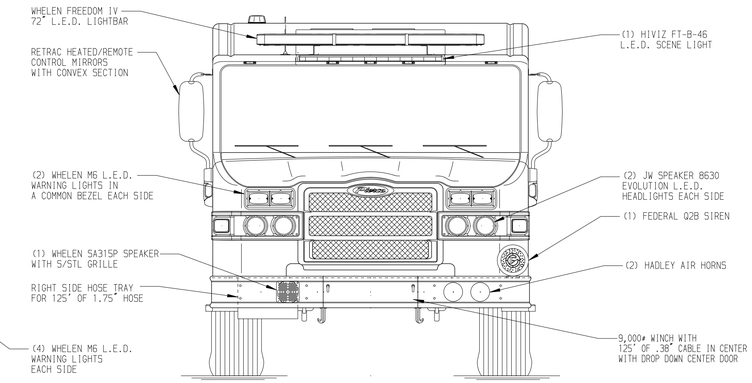

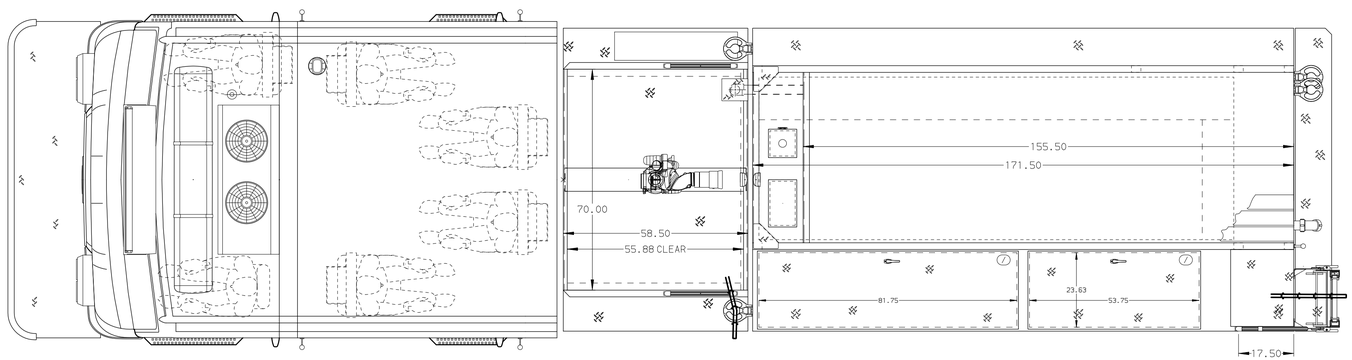

HOSEBED CAPACITIES
1. 500' OF 5" D.J. POLY HOSE
2. 500' OF 2.5" D.J. POLY HOSE
3. 300' OF 2.5" D.J. POLY HOSE

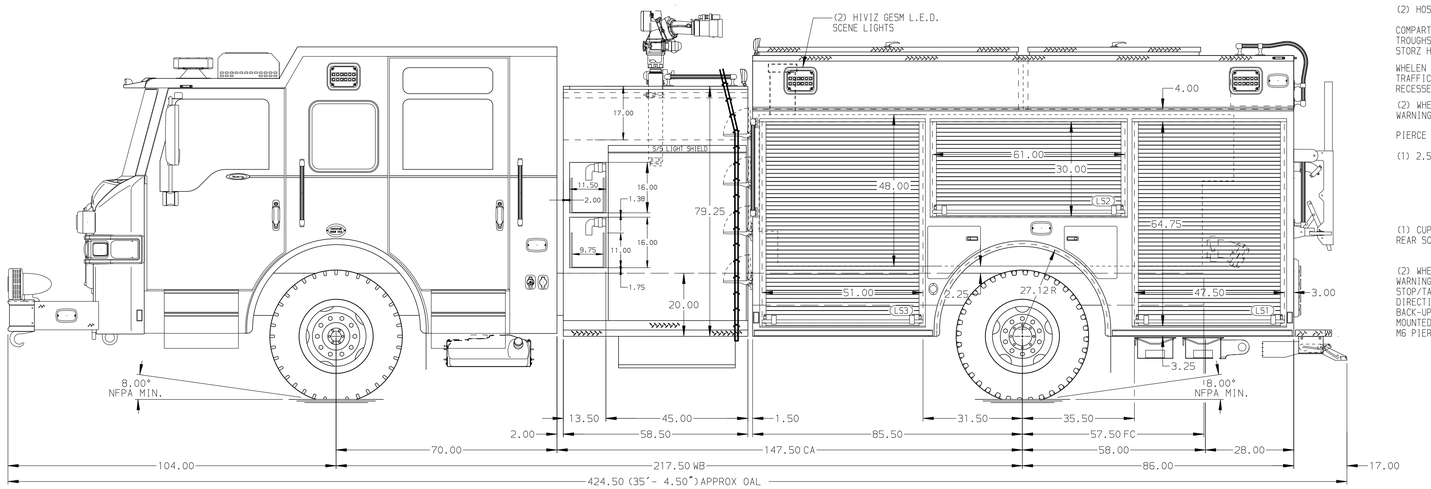

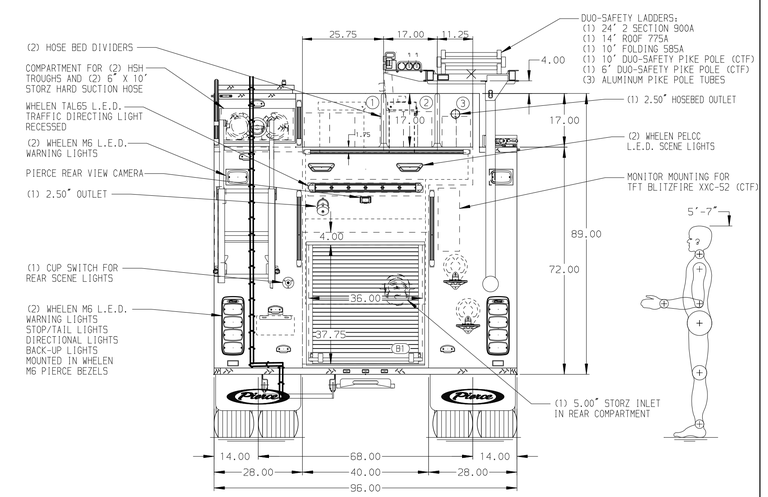

NOTE

DIMENSIONS SHOWN ARE APPROXIMATE AND ARE SUBJECT TO MINOR DEVIATIONS AS MAY OCCUR OR BE NECESSARY IN CONSTRUCTION.
MINOR DETAILS NOT SHOWN.

1. ONE 1.50 OUTLET WITH 2.00 PIPING AND SWIVEL LOCATED IN RIGHT BUMPER TRAY
2. 20A SHORELINE RECEPTACLE WITH KUSSMAUL SUPER AUTO EJECT LOCATED ON THE DRIVER SIDE CAB
3. AIR INLET WITH KUSSMAUL AIR EJECT AND COVER LOCATED ON THE DRIVER SIDE CAB
4. BATTERY CHARGER LOCATED PER ORDER
5. BATTERY CHARGE INDICATOR LOCATED ON DRIVER SEAT RISER
6. DUAL L.E.D. LIGHT STRIPS LOCATED IN HOSE BED
7. THREE FLOOR MOUNTED SLIDE-OUT TRAYS LOCATED PER ORDER
8. ONE CTECH FOUR DRAWER CABINET LOCATED PER ORDER
9. ONE SWING-OUT TOOLBOARD LOCATED PER SHOP ORDER

REV	DATE	BY	CH
7	25AUG25	SJM	JKR
6	04APR25	SJM	JKR
5	10MAR25	SJM	JKR

CHASSIS DATA
MAKE: PIERCE
MODEL: VELOCITY

Pierce MANUFACTURING INC.

TITLE: Pierce Pumper Approval Drawing
FOR: Andover Fire Department
DWG NO.: 40819AD

JOB NO.	40819
SCALE	1:24
DATE	
DRAWN BY	SJM 10JAN25
CHECKED BY	MMF 18JAN25
SHEET SIZE	D
SHEET NO.	1 OF 1

View File Created 26-AUG-2025 10:11:06