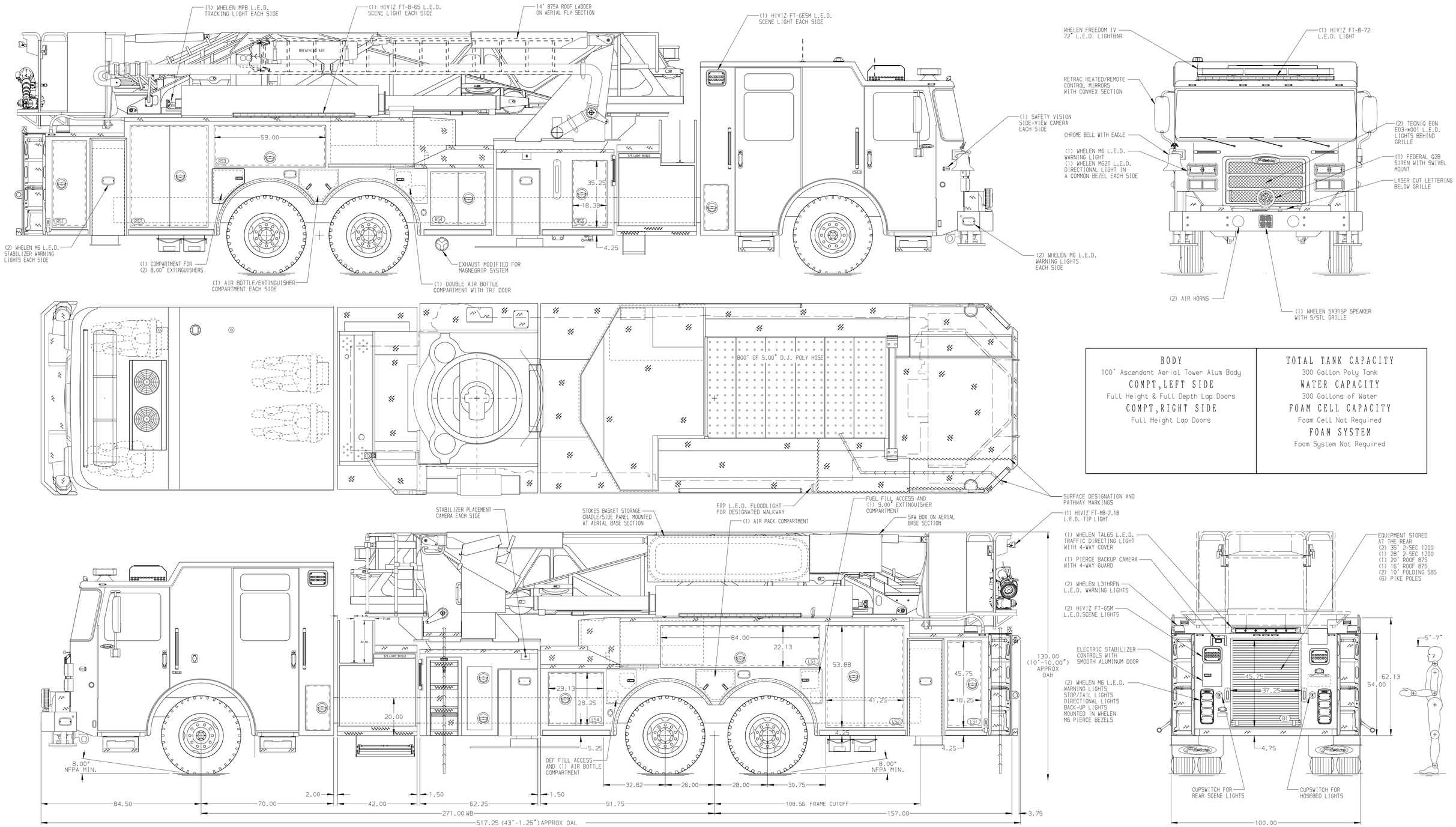

BODY	TOTAL TANK CAPACITY
100' Ascendant Aerial Tower Alum Body	300 Gallon Poly Tank
COMPT,LEFT SIDE	WATER CAPACITY
Full Height & Full Depth Lap Doors	300 Gallons of Water
COMPT,RIGHT SIDE	FOAM CELL CAPACITY
Full Height Lap Doors	Foam Cell Not Required
	FOAM SYSTEM
	Foam System Not Required

CHASSIS	CAB	AXLE,FRONT,CUSTOM	TRANSMISSION	PUMPHOUSE	CROSSLAYS,1.50"	SPEEDLAYS	SAFETY
Enforcer Chassis	7010 Enforcer Cab	24,000 Lb TAK-4 Axle	ALlison 6th Gen, 4000 EVS P	42" Control Zone Side Mount	(2) 1.50", Standard Capacity	Speedlays Not Required	Side Roll and Frontal Impact Protection
ENGINE	BUMPER	AXLE,REAR		PUMP	CROSSLAYS,2.50"	GENERATOR	
605 HP Cummins X15 Engine	15" Painted Aluminum	54,000 Lb Meritor Axle		2000 GPM Waterous S100	2.50" Crosslay Not Required	Generator Not Required	

Pierce MANUFACTURING INC.

NOTE

DIMENSIONS SHOWN ARE APPROXIMATE AND ARE SUBJECT TO MINOR DEVIATIONS AS MAY OCCUR OR BE NECESSARY IN CONSTRUCTION.
MINOR DETAILS NOT SHOWN.

1. SHORELINE RECEPTACLE WITH KUSSMAUL SUPER AUTO-EJECT LOCATED ON DRIVER SIDE OF THE CAB
2. AIR INLET/OUTLET WITH DISCONNECT FITTING & 1/4 TURN VALVE LOCATED IN THE DRIVER SIDE STEPWELL
3. BATTERY CHARGER LOCATED BEHIND DRIVER SEAT
4. BATTERY CHARGE INDICATOR LOCATED ON DRIVER SEAT RISER
5. FIVE ADJUSTABLE SHELVES LOCATED IN COMPARTMENTS PER ORDER
6. THREE TILT/SLIDE-OUT TRAYS LOCATED IN COMPARTMENTS PER ORDER
7. FOUR FLOOR MOUNTED SLIDE-OUT TRAYS LOCATED IN COMPARTMENTS PER ORDER
8. ONE CTECH TWO-DRAWER CABINET LOCATED IN COMPARTMENT PER ORDER
9. ONE CTECH THREE-DRAWER CABINET LOCATED IN COMPARTMENT PER ORDER
10. TWO TOOLBOARDS ADDED TO SLIDE-OUT TRAYS LOCATED PER ORDER
11. ONE VERTICAL PARTITION LOCATED IN COMPARTMENT PER ORDER
12. 3-in-1 LYFECOMBO BRACKETS AT AERIAL BASKET
13. TECNIQ 5-SECTION RUNG LIGHTING AT AERIAL DEVICE
14. DC PWER TO AERIAL TIP
15. FOUR HIVIZ FT-MB-12-TR L.E.D. LIGHTS UNDER BASKET SIDE & CORNER STEPS
16. REMOTE AERIAL CONTROL LOCATED IN COMPARTMENT PER ORDER

REV	DATE	BY	CH
1	21JAN25	ANZ	TDC
0	02DEC24	ANZ	TDC

CHASSIS DATA
MAKE: PIERCE
MODEL: ENFORCER

TITLE: 100' ASCENDANT AERIAL TOWER AND BODY ASSEMBLY
300 GALLON WATER TANK
FOR: OAK RIDGE FIRE DEPARTMENT
OAK RIDGE, TN

DWG NO. 40840AD

JOB NO.	40840
SCALE 1:24	DATE
DRAWN BY ANZ	11SEP24
CHECKED BY JLO	17SEP24
SHEET SIZE D	SHEET NO. 1 OF 1

View File Created 29-JAN-2025 08:15:26