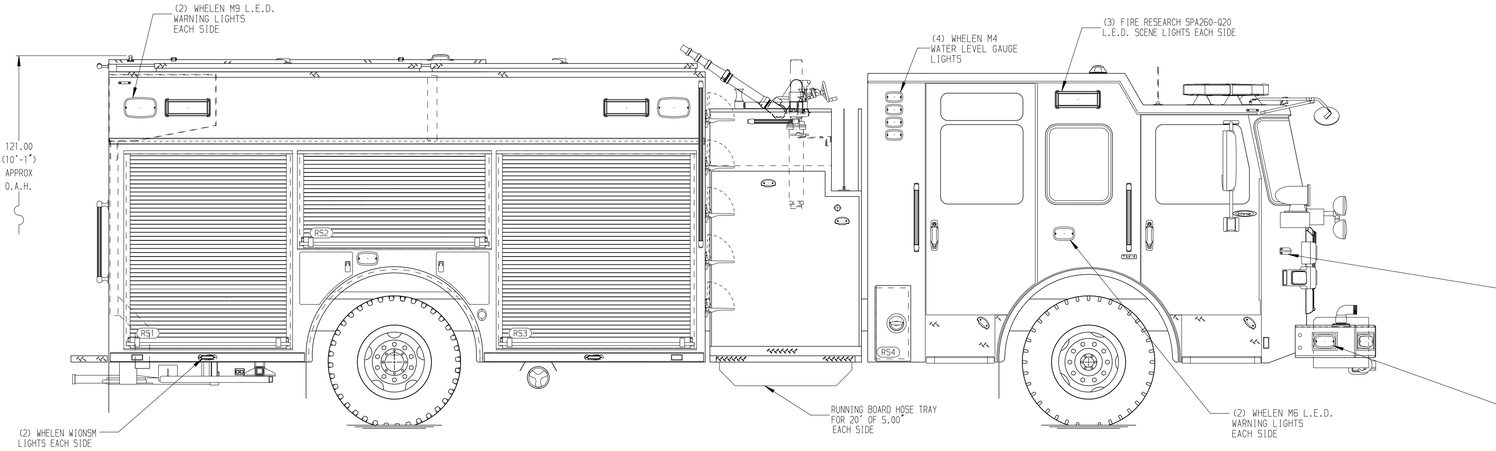

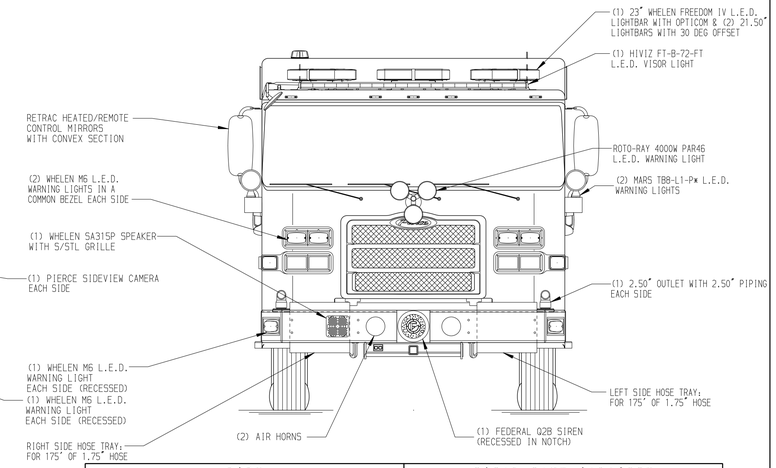

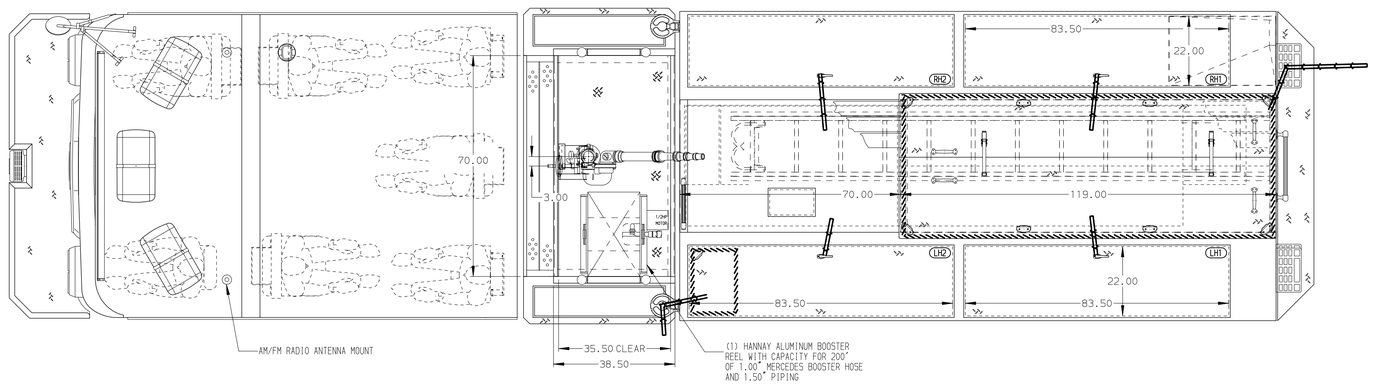

BODY	TOTAL TANK CAPACITY
Pumper, HDRP, Aluminum	750 Gallon Poly Tank
COMPT,LEFT SIDE	WATER CAPACITY
189" Rollup Full Height & Depth Front & Rear	750 Gallons of Water
COMPT,RIGHT SIDE	FOAM CELL CAPACITY
189" Rollup Full Height & Depth Front & Rear	Not Required
COMPT,REAR	FOAM SYSTEM
29.50" FF Rollup Rear Compt w/Tailboard	Not Required

HOSEBED CAPACITY
BED 1
250' OF 2.50" D.J. POLY HOSE
BED 2
400' OF 1.75" D.J. POLY HOSE
BED 3
1000' OF 5.00" D.J. POLY HOSE
BED 4
600' OF 3.00" D.J. POLY HOSE

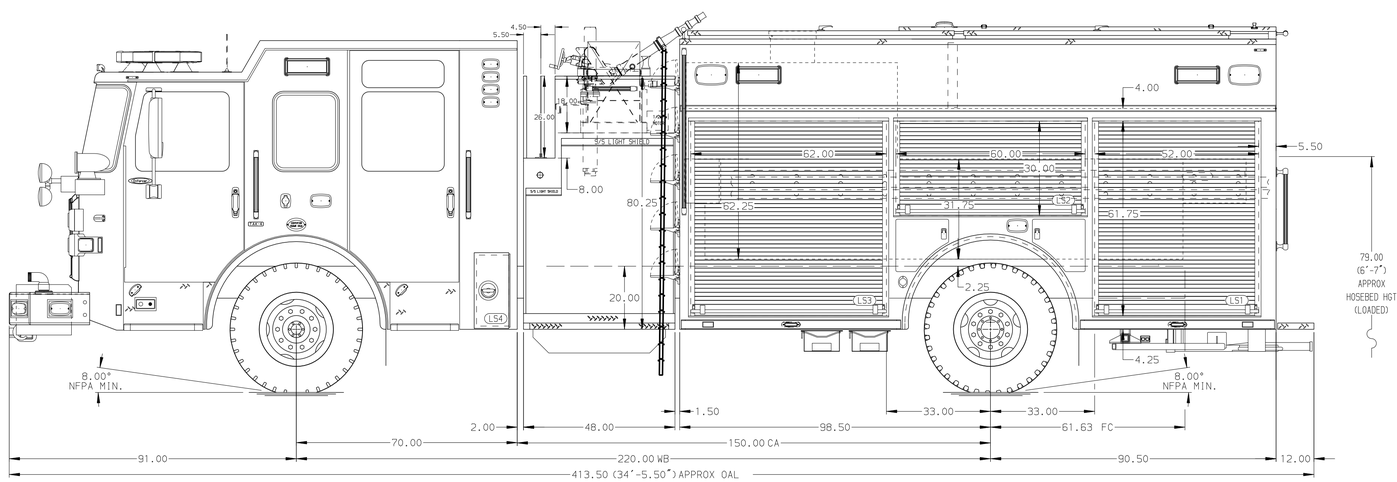

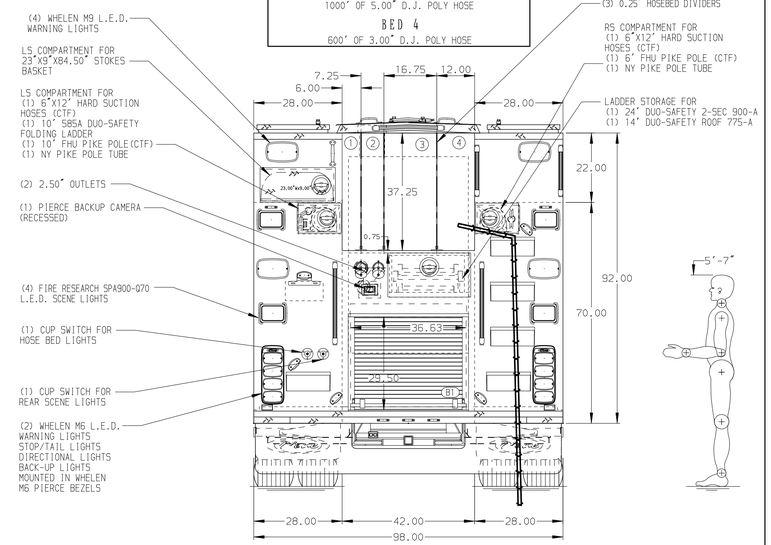

CHASSIS	CAB	AXLE,FRONT,CUSTOM	TRANSMISSION	PUMPHOUSE	CROSSLAYS,1.50"	SPEEDLAYS	SAFETY
Enforcer Chassis	7010 Enforcer Cab	22,800 Lb TAK-4 Axle	ALLison 6th Gen, 3000 EVS P	48" Control Zone Side Mount	(2) 1.50" Standard Capacity	Speedlays Not Required	Side Roll and Frontal Impact Protection
ENGINE	BUMPER	AXLE,REAR		PUMP	CROSSLAYS,2.50"	GENERATOR	
450 HP Cummins L9 Engine	22" Extended Painted Steel	27,000 Lb Dana Axle		2000 GPM Hale QMAX-200	2.50" Crosslay Not Required	Generator Not Required	

NOTE

DIMENSIONS SHOWN ARE APPROXIMATE AND ARE SUBJECT TO MINOR DEVIATIONS AS MAY OCCUR OR BE NECESSARY IN CONSTRUCTION.
MINOR DETAILS NOT SHOWN.

1. SHORELINE RECEPTACLE WITH KUSSMAUL SUPER AUTO-EJECT LOCATED ON DRIVER SIDE OF THE CAB
2. AIR INLET/OUTLET WITH DISCONNECT COUPLING IN THE DRIVER SIDE STEPWELL
3. BATTERY CHARGER LOCATED PER ORDER
4. BATTERY CHARGE INDICATOR LOCATED ON DRIVER SEAT RISER
5. AUTOMATIC TIRE CHAINS

REV	DATE	BY	CH
D	15AUG25	JAM	ZWE
C	12MAR25	JAM	ZWE
B	06MAR25	JWR	ZWE
A	29JAN25	JAM	ZWE

CHASSIS DATA — MAKE: PIERCE — MODEL: ENFORCER

Pierce MANUFACTURING INC.

TITLE: Pierce Pumper Approval Drawing –
FOR: Denver Fire Company –
DWG NO.: 40842AD-SH1

JOB NO. 40842 — SCALE 1:24 — DATE
DRAWN BY JAM 02DEC24
CHECKED BY MMF 03DEC24
SHEET SIZE D — SHEET NO. 1 OF 2

View File Created 15-AUG-2025 12:26:56