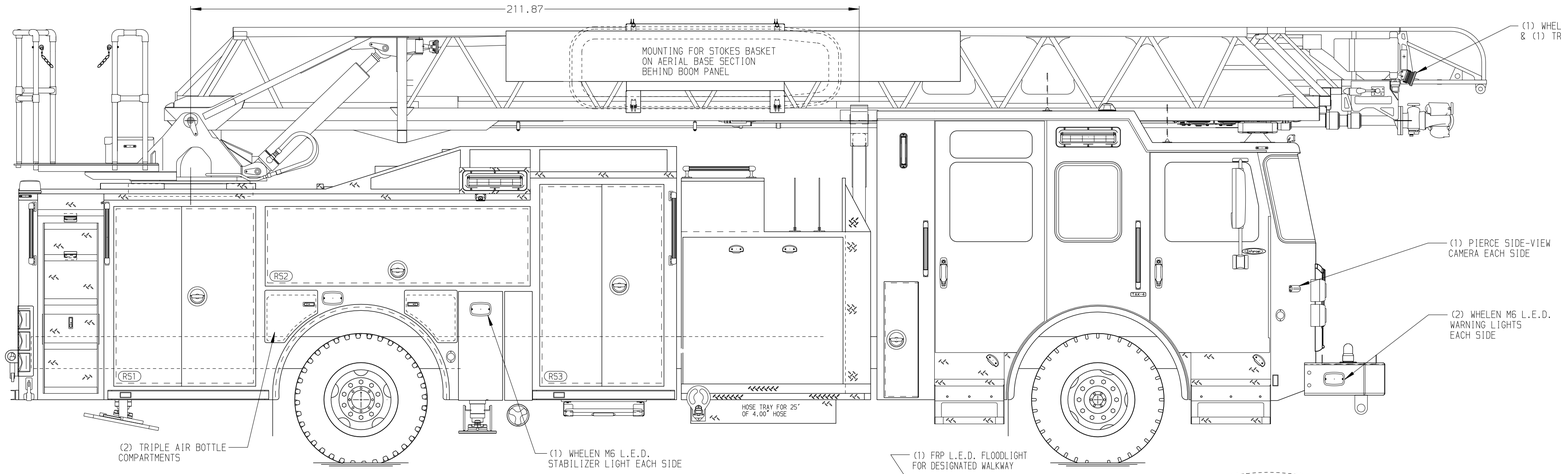


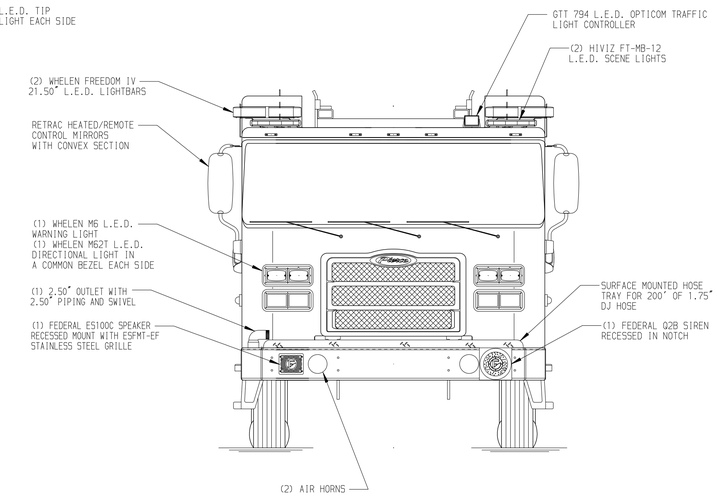


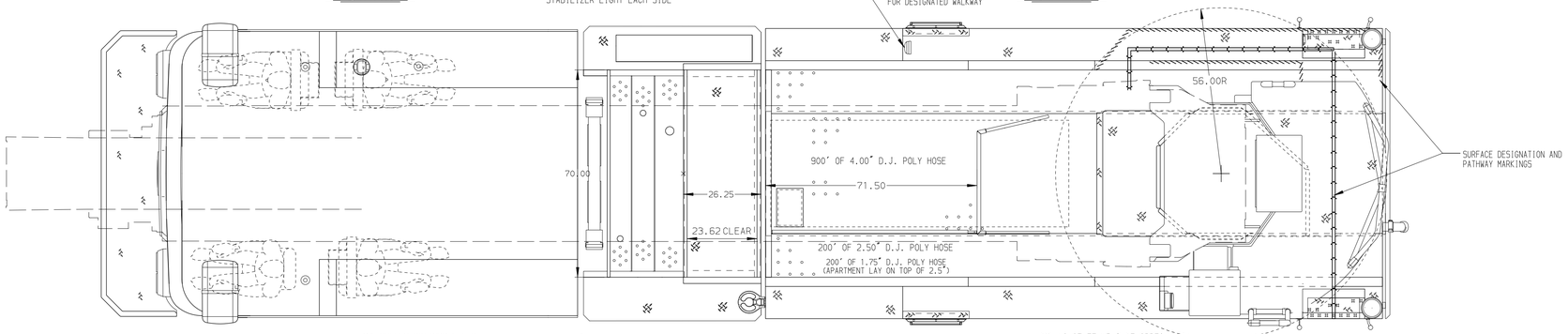


| BODY | TOTAL TANK CAPACITY |
|---|---|
| 107' ASL Aluminum Body | 500 Gallon Poly Tank |
| COMPT,LEFT SIDE FRONT | WATER CAPACITY |
| Full Height Lap Forward | 500 Gallons of Water |
| COMPT,LEFT SIDE REAR | FOAM CELL CAPACITY |
| Full Height Lap Rearward | Foam Cell Not Required |
| COMPT,RIGHT SIDE FRONT | FOAM SYSTEM |
| Full Height Lap Forward | Foam System Not Required |
| COMPT,RIGHT SIDE REAR | |
| Full Height Lap Rearward | |

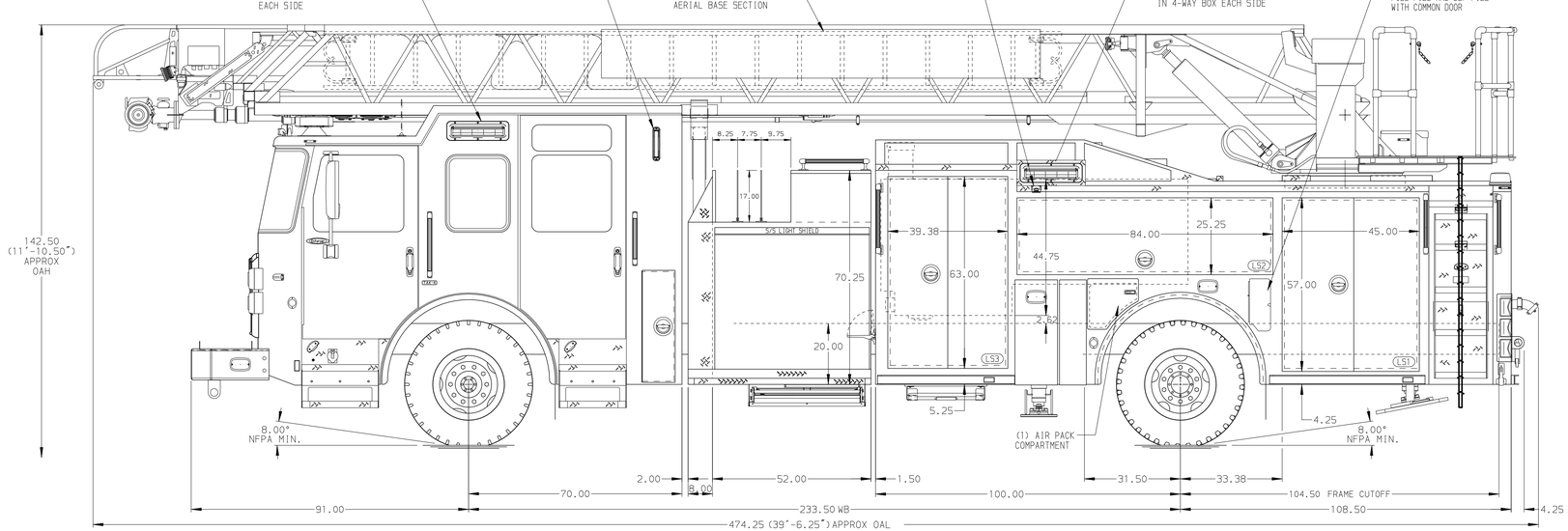


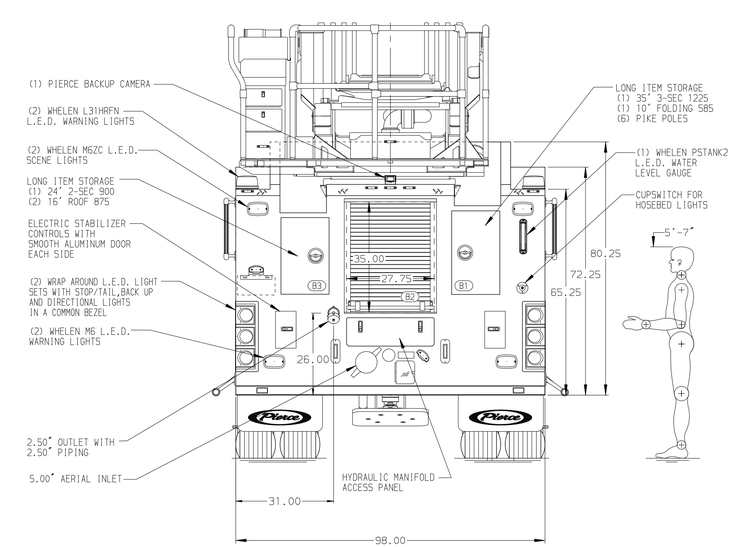


| CHASSIS | CAB | ELECTRICAL SYSTEM | AXLE,FRONT,CUSTOM | PUMPHOUSE | CROSSLAYS,1.50" | SPEEDLAYS | SAFETY |
|---|---|---|---|---|---|---|---|
| Enforcer Chassis | 7010 Notched Enforcer Cab | MUX | 22,800 Lb TAK-4 Axle | 52' Control Zone Side Mount | (2) 1.50" Standard Capacity | Speedlays Not Required | Frontal Impact Protection |
| ENGINE | BUMPER | TRANSMISSION | AXLE,REAR | PUMP | CROSSLAYS,2.50" | GENERATOR | |
| 455 HP Cummins X12 Engine | 22" Extended Painted Steel | ALLison 6th Gen, 4000 EVS PR | 33,500 Lb Meritor Axle | 2000 GPM Waterous CSU | (1) 2.50" Standard Capacity | Generator Not Required | |

NOTE

DIMENSIONS SHOWN ARE APPROXIMATE AND ARE SUBJECT TO MINOR DEVIATIONS AS MAY OCCUR OR BE NECESSARY IN CONSTRUCTION.
MINOR DETAILS NOT SHOWN.

1. NO LIMITED RETRACTION REQUIRED
2. TECNIQ 4-SECTION RUNG LIGHTING AT AERIAL DEVICE
3. SHORELINE STRAIGHT BLADE RECEPTACLE LOCATED IN DRIVER SIDE STEPWELL
4. AIR INLET WITH DISCONNECT COUPLING IN THE DRIVER SIDE STEPWELL
5. BATTERY CHARGER LOCATED PER ORDER
6. BATTERY CHARGE INDICATOR LOCATED ON DRIVER SEAT RISER
7. EIGHT ADJUSTABLE SHELVES LOCATED IN COMPARTMENTS PER ORDER
8. TWO FLOOR MOUNTED SLIDE-OUT TRAYS LOCATED IN COMPARTMENTS PER ORDER
9. ONE SWING-OUT ALUMINUM TOOLBOARD LOCATED IN COMPARTMENT PER ORDER
10. ONE POLY TOOL BOX LOCATED IN COMPARTMENT PER ORDER
11. FOUR PAC TRAC MOUNTING SYSTEMS ON COMPARTMENT BACK-WALLS PER ORDER
12. LIFTING EYE ROPE RESCUE ATTACHMENT AT AERIAL TIP
13. SEVEN RECEPTACLES LOCATED PER ORDER
14. 1500 GPM HIGH FLOW WATERWAY

| REV | DATE | BY | CH |
|---|---|---|---|
| 3 | 12MAY25 | ANZ | COS |
| 2 | 04APR25 | ANZ | COS |

CHASSIS DATA
MAKE: PIERCE
MODEL: ENFORCER

Pierce MANUFACTURING INC.

TITLE: 107' ASCENDANT AERIAL LADDER AND BODY ASSEMBLY
500 GALLON TANK
FOR: HYANNIS FIRE DEPARTMENT,MA
HYANNIS, MA
DWG NO.: 40885AD

| JOB NO. | 40885 |
|---|---|
| SCALE 1:24 | DATE |
| DRAWN BY ANZ | 23JAN25 |
| CHECKED BY JLO | 31JAN25 |
| SHEET SIZE D | SHEET NO. 1 OF 1 |

View File Created 13-MAY-2025 14:32:58