PUMPER, PUC

BODY
Pumper, PUC, Aluminum

CHASSIS
Enforcer Chassis, PUC

ELECTRICAL SYSTEM
Hard Wired

CHASSIS

AXLE,FRONT,CUSTOM
24,000 Lb TAK-4 Axle

AXLE,REAR
33,500 Lb Meritor Axle

ENGINE
510 HP Paccar MX13 Engine

TRANSMISSION
Allison 6th Gen, 4000 EVS P

BUMPER
22" Extended Stainless Steel

CAB
7010 Enforcer Cab, PUC

BODY

TOTAL TANK CAPACITY
1020 Gallon Poly Tank

WATER CAPACITY
1000 Gallons of Water

FOAM CELL CAPACITY
20 Gallon Foam Cell

COMPT,PUMPER,REAR
33.50" FF Rollup Rear Compt w/Tailboard, PUC

COMPT,PUMPER,LEFT SIDE
214" Rollup Full Height & Depth Front & Rear, PUC

COMPT,PUMPER,RIGHT SIDE
214" Rollup Full Height & Depth Front & Rear, PUC

FIRE SUPPRESSION

PUMPHOUSE
Control Zone, PUC

PUMP
2000 GPM Pierce PUC

CROSSLAYS,1.50"
(2) 1.50", Poly Trays, 200'

CROSSLAYS,2.50"
(1) 2.50", Poly Tray, 200'

SPEEDLAYS
Speedlays Not Required

GENERATOR
Generator Not Required

FOAM SYSTEM
Husky 12 Single Agent Foam System

SAFETY

Side Roll and Frontal Impact Protection

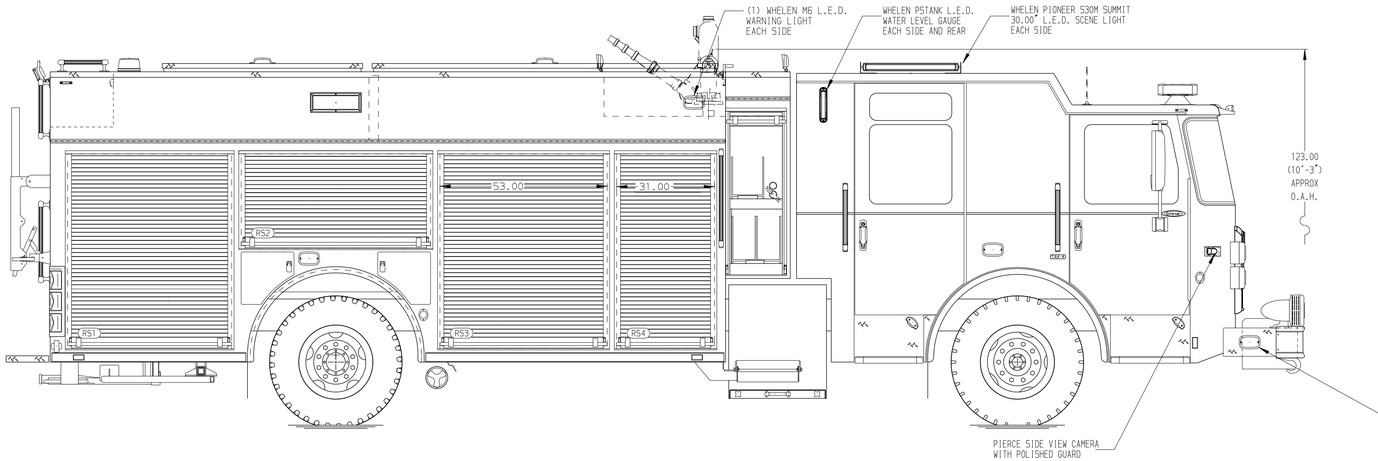

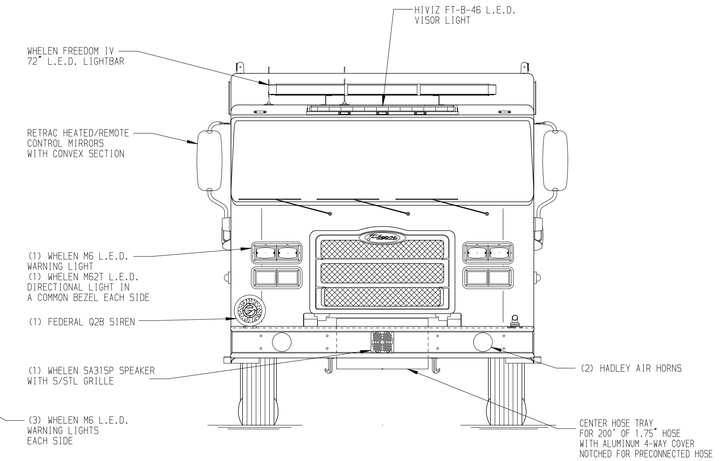

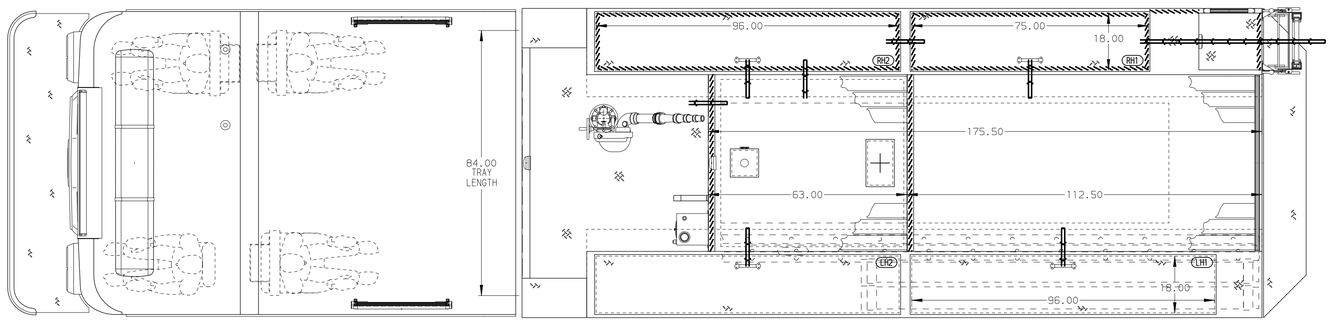

HOSEBED CAPACITIES

1 - 300' OF 2.50" D.J. POLY HOSE
2 - 1200' OF 5.00" D.J. POLY HOSE
3 - 300' OF 2.50" D.J. POLY HOSE

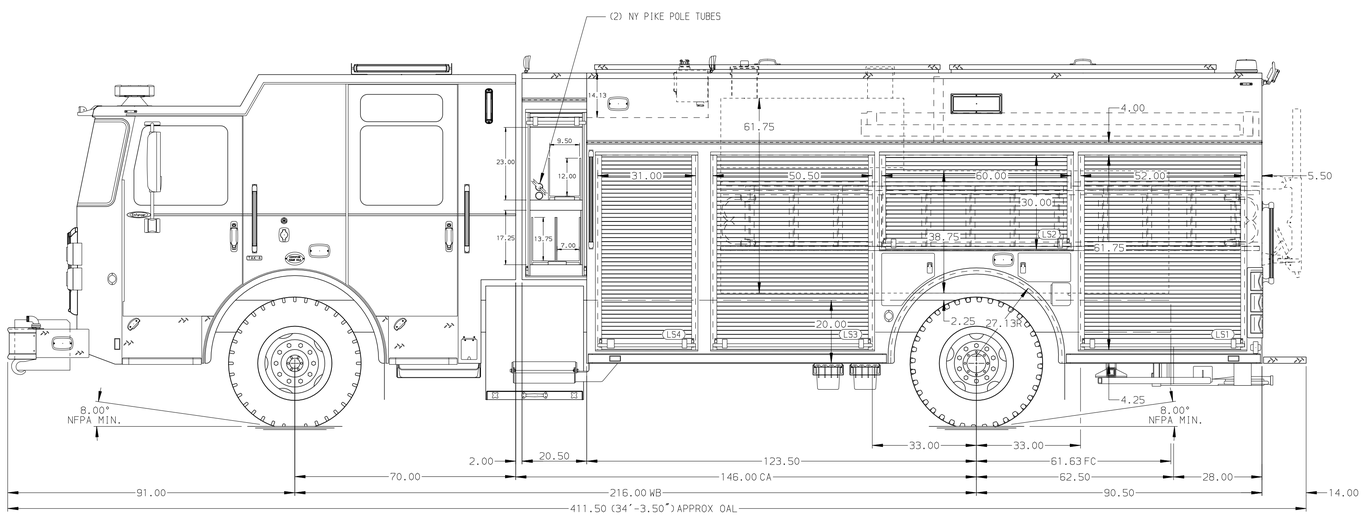

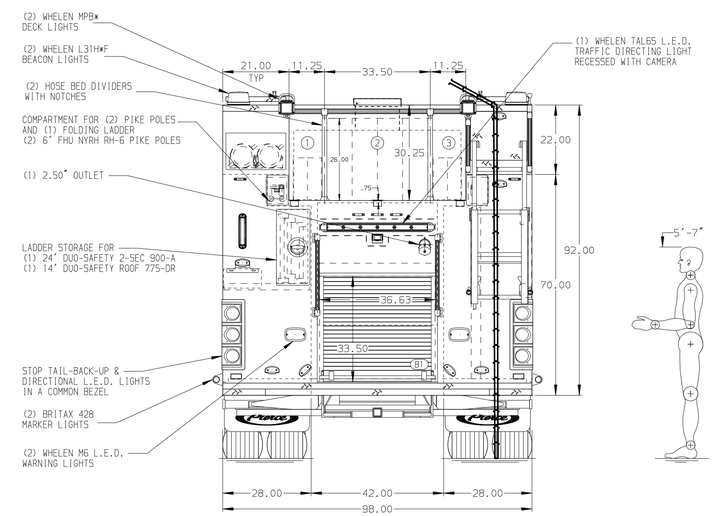

NOTE

DIMENSIONS SHOWN ARE APPROXIMATE AND ARE SUBJECT TO MINOR DEVIATIONS AS MAY OCCUR OR BE NECESSARY IN CONSTRUCTION.
MINOR DETAILS NOT SHOWN.

1. ONE 1.50 OUTLET WITH 2.00 PIPING AND SWIVEL LOCATED ON TOP LEFT OF BUMPER
2. SHORELINE RECEPTACLE WITH KUSSMAUL SUPER AUTO-EJECT LOCATED ON DRIVER SIDE OF THE CAB
3. AIR INLET WITH KUSSMAUL AIR EJECT ON DRIVER SIDE OF THE CAB
4. AIR OUTLET WITH SHUT OFF VALVE LOCATED IN COMPARTMENT LS3
5. BATTERY CHARGER LOCATED PER ORDER
6. BATTERY CHARGE INDICATOR LOCATED ON DRIVER SEAT RISER
7. ELEVEN ADJUSTABLE SHELVES LOCATED PER ORDER
8. FOUR FLOOR MOUNTED SLIDE-OUT TRAYS LOCATED PER ORDER
9. ONE CTECH FOUR DRAWER ASSEMBLY LOCATED PER ORDER
10. ONE SINWG-OUT TOOLBOARD WITH PEGBOARD PATTERNS LOCATED PER ORDER
11. TWO VERTICAL PARTITIONS LOCATED PER ORDER

REV	DATE	BY	CH
C	10OCT25	JDA	TDC
B	30JUL25	JDA	TDC
A	24JUN25	JDA	TDC

CHASSIS DATA
MAKE: PIERCE
MODEL: ENFORCER

Pierce MANUFACTURING INC.

TITLE	Pierce PUC Pumper Approval Drawing -
FOR	Stevens Point -
DWG NO.	40896AD
JOB NO.	40896
SCALE	1:24
DRAWN BY	JJB
DATE	20MAR25
CHECKED BY	MMF
DATE	20MAR25
SHEET SIZE	D
SHEET NO.	1 OF 1

View File Created 10-OCT-2025 13:12:45