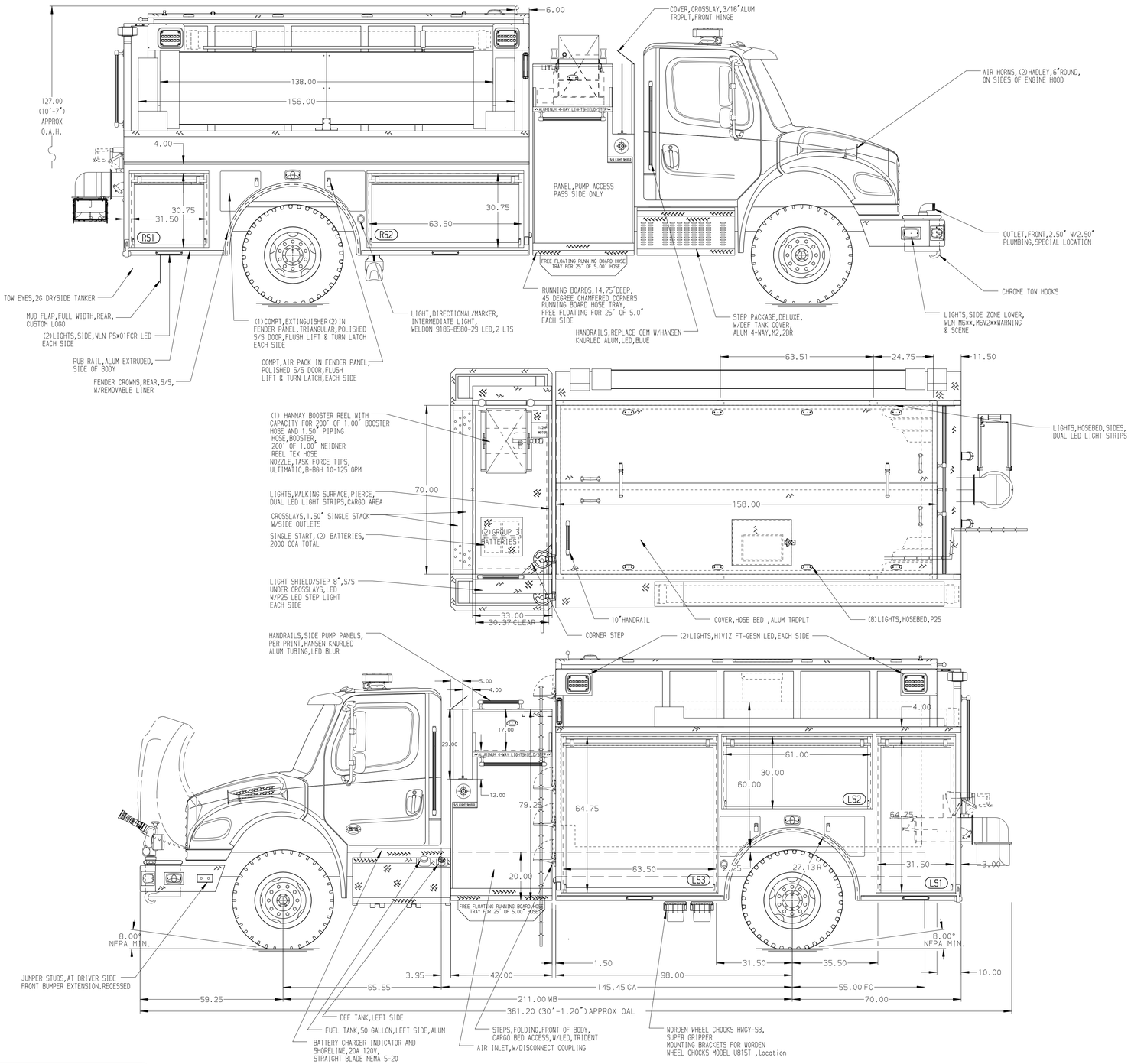

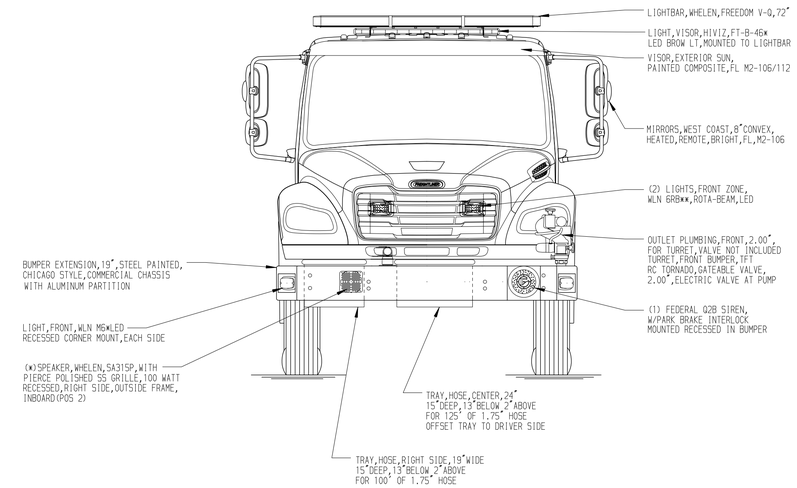

HOSEBED CAPACITIES

1. 200' OF 3.00" D.J. POLY HOSE
2. 1000' OF 5.00" D.J. POLY HOSE
3. ADDITIONAL HOSE STORAGE

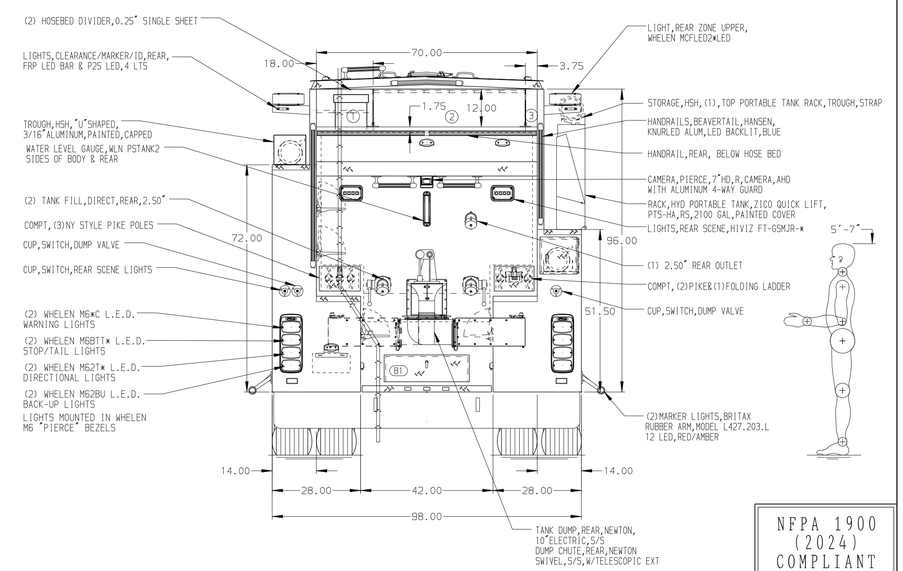

NFPA 1900 (2024) COMPLIANT

ALUMINUM BODY

NOTE

DIMENSIONS SHOWN ARE APPROXIMATE AND ARE SUBJECT TO MINOR DEVIATIONS AS MAY OCCUR OR BE NECESSARY IN CONSTRUCTION.
MINOR DETAILS NOT SHOWN.

REV	DATE	BY	CH
7	07JUN25	ADP	DDR
6	26MAR25	RHU	EEM
5	03FEB25	RHU	RHU

CHASSIS DATA: MAKE FL; MODEL M2-106 PLUS

TITLE: 1250-D-2000 POLY,2G DRYSIDE TANKER 168" BODY DRY SIDE TANKER, MUX

FOR: GRANVILLE FIRE COMPANY GRANVILLE,PA

DWG NO.: 40900AD

Pierce MANUFACTURING INC.

JOB NO.	40900
SCALE 1:24	DATE
DRAWN BY RHU	28JAN25
CHECKED BY AJA	29JAN25
SHEET SIZE D	SHEET NO. 1 OF 1

View File Created 09-JUN-2025 13:27:56