RIGHT SIDE COMPARTMENTS CONTAIN THE FOLLOWING:

COMPARTMENT RS1 CONTAINS:
- (1) RACK FOR 24 SCBA BOTTLES
- (1) 15/20A,120V 4-PLACE RECEPTACLE
- (1) CASCADE SYSTEM CONTROL PANEL
- (1) "SPACESAVER"2-BOTTLE FILL ENCLOSURE

COMPARTMENT RS2 CONTAINS:
- (1) 1/2 DEPTH ADJ SLIDE OUT/TILT TRAY
- (1) 2-WAY FLOOR MTD SLIDE OUT TRAY

COMPARTMENT RS3 CONTAINS:
- (1) 2-WAY ADJ SLIDE OUT TRAY
- (1) 1/2 DEPTH ADJ SLIDE OUT/TILT TRAY
- (1) FLOOR MOUNTED TRAY
- (1) 15/20A,120V 4-PLACE RECEPTACLE

COMPARTMENT RS4 CONTAINS:
- (1) CAB LIFT CONTROLLER
- (1) 2-WAY ADJ SLIDE OUT TRAY
- (1) 1/2 DEPTH ADJ SLIDE OUT/TILT TRAY
- (1) FLOOR MOUNTED TRAY
- (1) 15/20A,120V 4-PLACE RECEPTACLE

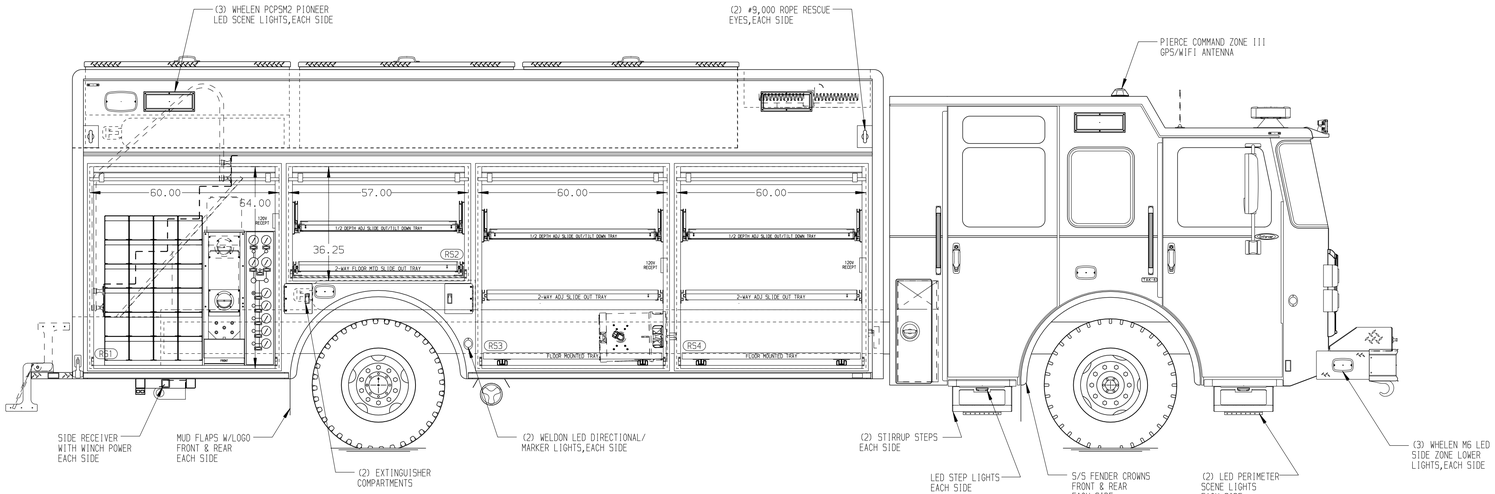

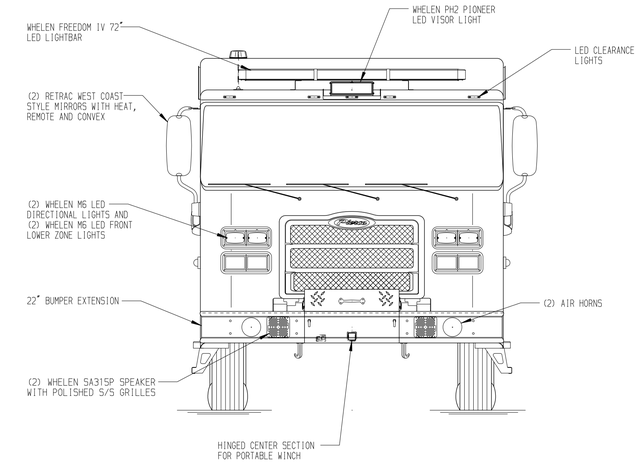

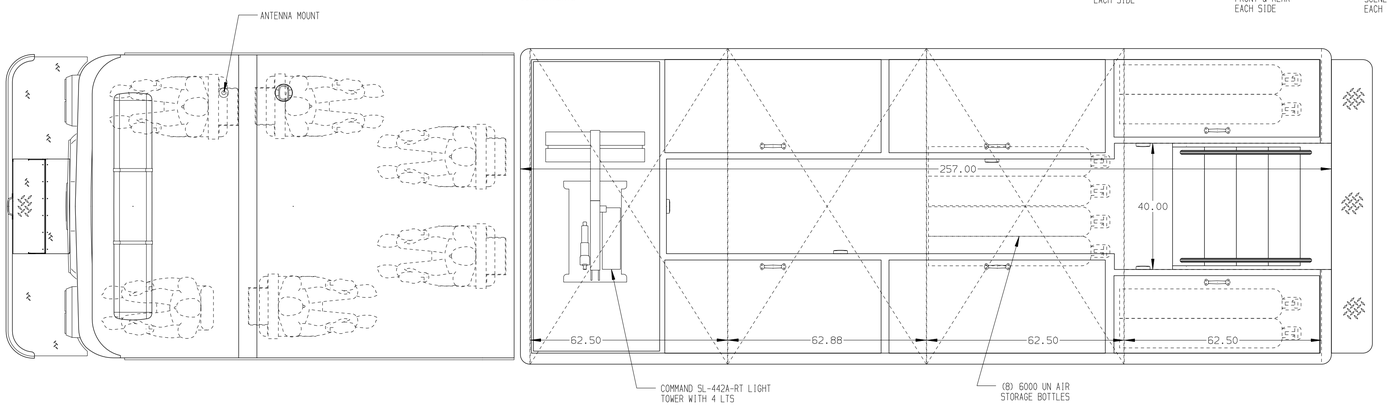

REAR COMPARTMENT CONTAINS THE FOLLOWING:

COMPARTMENT B1 CONTAINS:
- (1) 2.4 CU.FT. REFRIGERATOR

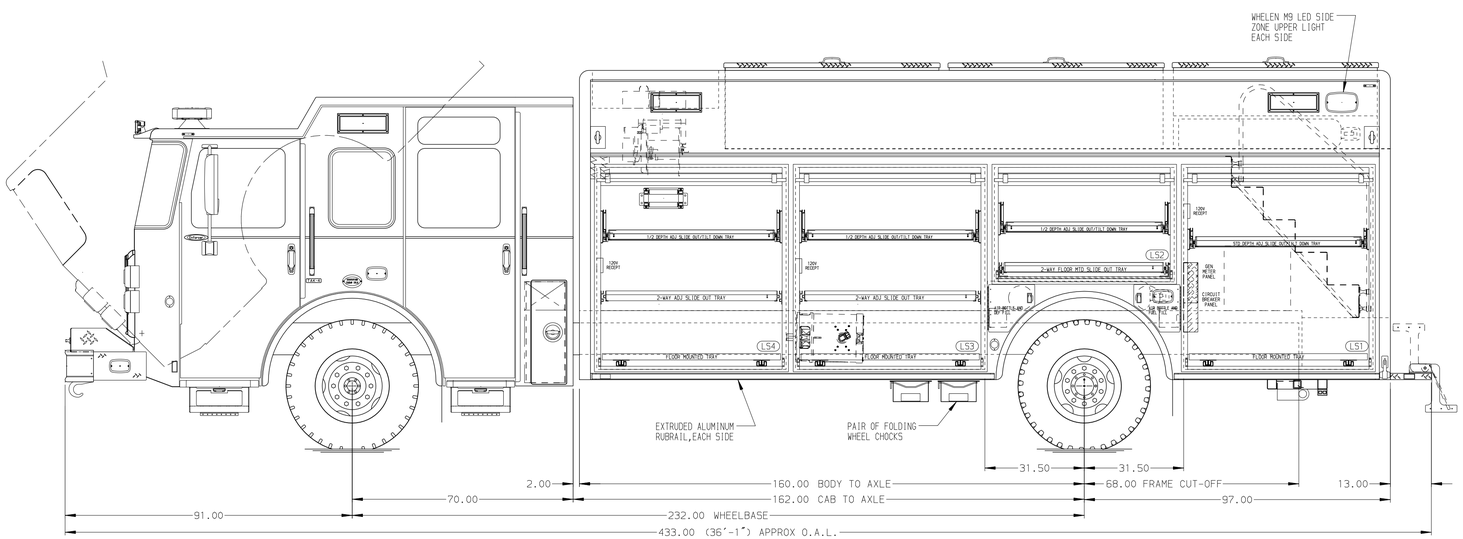

LEFT SIDE COMPARTMENTS CONTAIN THE FOLLOWING:

COMPARTMENT LS1 CONTAINS:
- (1) STD DEPTH ADJ SLIDE OUT/TILT TRAY
- (1) FLOOR MOUNTED TRAY
- (1) CIRCUIT BREAKER PANEL
- (1) GENERATOR METER PANEL
- (1) 15/20A,120V 4-PLACE RECEPTACLE
- (1) COMMAND LIGHT CONTROLLER

COMPARTMENT LS2 CONTAINS:
- (1) 1/2 DEPTH ADJ SLIDE OUT/TILT TRAY
- (1) 2-WAY FLOOR MTD SLIDE OUT TRAY

COMPARTMENT LS3 CONTAINS:
- (1) 2-WAY ADJ SLIDE OUT TRAY
- (1) 1/2 DEPTH ADJ SLIDE OUT/TILT TRAY
- (1) FLOOR MOUNTED TRAY
- (1) 15/20A,120V 4-PLACE RECEPTACLE

COMPARTMENT LS4 CONTAINS:
- (1) IOTA 75 AMP BATTERY CHARGER
- (1) 2-WAY ADJ SLIDE OUT TRAY
- (1) 1/2 DEPTH ADJ SLIDE OUT/TILT TRAY
- (1) FLOOR MOUNTED TRAY
- (1) ELECTRIC CORD REEL WITH 200' OF 10/3 BLACK CORD
- (1) 15/20A,120V 4-PLACE RECEPTACLE

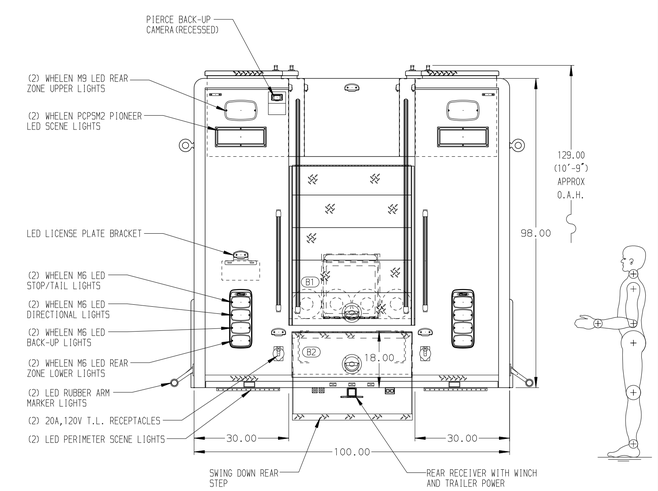

NOTE

DIMENSIONS SHOWN ARE APPROXIMATE AND ARE SUBJECT TO MINOR DEVIATIONS AS MAY OCCUR OR BE NECESSARY IN CONSTRUCTION.
MINOR DETAILS NOT SHOWN.

NOTES:
1. AIR INLET WITH DISCONNECT COUPLING LOCATED IN DRIVER'S STEP WELL
2. WARN #9,000 PORTABLE RECEIVER STYLE WINCH
3. POLISHED S/S SCUFFPLATES ON CAB AND CREW CAB DOOR JAMBS
4. FLOOR IN CAB AND CREW CAB TO BE PADDED RUBBER
5. BATTERY CHARGE INDICATOR LOCATED ON DRIVER'S SEAT RISER
6. 20A,120V SHORELINE INLET LOCATED IN DRIVER'S STEP WELL
7. PIERCE LED LIGHTS IN ALL BODY AND HATCH COMPARTMENTS
8. HARRISON 25kW SINGLE PHASE PTO DRIVEN GENERATOR LOCATED BETWEEN THE FRAME RAILS
9. 15A,120V 6-PLACE RECEPTACLE LOCATED ON ENGINE TUNNEL
10. (2) 15/20A,120V 4-PLACE RECEPTACLES LOCATED ON REAR WALL OF CAB ON EACH SIDE

SIDE ROLL AND FRONTAL IMPACT PROTECTION

CLEAR DOOR WIDTH KEY

AMDOR ROLL UP DOORS:	-2 1/4"
GORTITE ROLL UP DOORS:	-2 1/2"
PIERCE DOUBLE LAP DOORS:	-4 1/4"
PIERCE LIFT-UP LAP DOORS:	-1 1/2"

(EX: 60"F-F - 2 1/4"= 57 3/4" CLEAR)
(F-F)= FRAME TO FRAME

REV	DATE	BY	CH
1	01JUL25	AZU	GFI
2	16APR25	DHE	AZU
3	20FEB25	DHE	GFI

CHASSIS DATA
MAKE: PIERCE
MODEL: EN7010
DWG NO.

Pierce MANUFACTURING INC.

TITLE: HEAVY DUTY RESCUE NON-WALKIN
FOR: MISHICOT FIRE DEPARTMENT BID #982
FIRE APPARATUS & EQUIPMENT, INC. LESLIE NILES

JOB NO.	40934
SCALE	1:24
DATE	26DEC24
DRAWN BY	DHE
CHECKED BY	GFI
03JAN25	
SHEET SIZE	D
SHEET NO.	1 OF 1

40934AD

View File Created 01-JUL-2025 10:54:23