PUMPER

BODY
Long Aluminum 2nd Gen Pumper

CHASSIS
Saber FR Chassis

CHASSIS

AXLE, FRONT, CUSTOM
18,000 Lb Hendrickson Steertek Axle

AXLE, REAR
27,000 Lb Meritor Axle

ENGINE
450 HP Cummins L9 Engine

TRANSMISSION
Allison 6th Gen, 3000 EVS P

BUMPER
19" Extended Painted Steel

CAB
7010 Saber FR Cab

BODY

TOTAL TANK CAPACITY
1000 Gallon Poly Tank

WATER CAPACITY
970 Gallons of Water

FOAM CELL
30 Gallon Foam Cell

COMPT, PUMPER, REAR
44.50" FF RollUp Rear Compt

COMPT, PUMPER, LEFT SIDE
171" RollUp Full Height & Depth Front & Rear

COMPT, PUMPER, RIGHT SIDE
171" RollUp Full Height Front & Rear FDLER

FIRE SUPPRESSION

PUMPHOUSE
45" Control Zone Side Mount

PUMP
1500 GPM Waterous CSU

CROSSLAYS, 1.50"
(2) 1.50" Standard Capacity

CROSSLAYS, 2.50"
2.50" Crosslay Not Required

SPEEDLAYS
Speedlays Not Required

GENERATOR
Generator Not Required

FOAM SYSTEM
Foam System Not Required

SAFETY

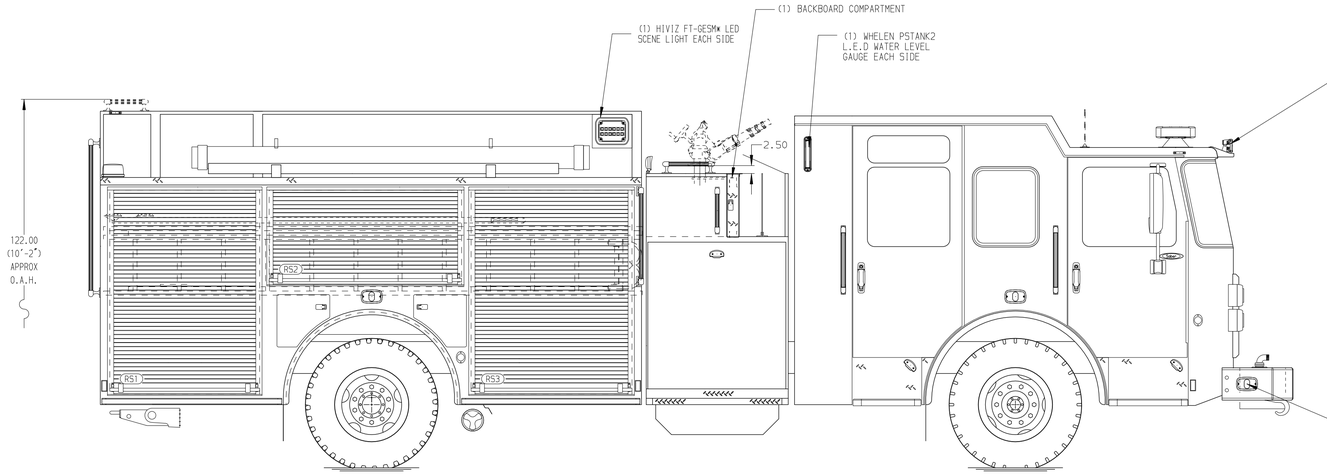

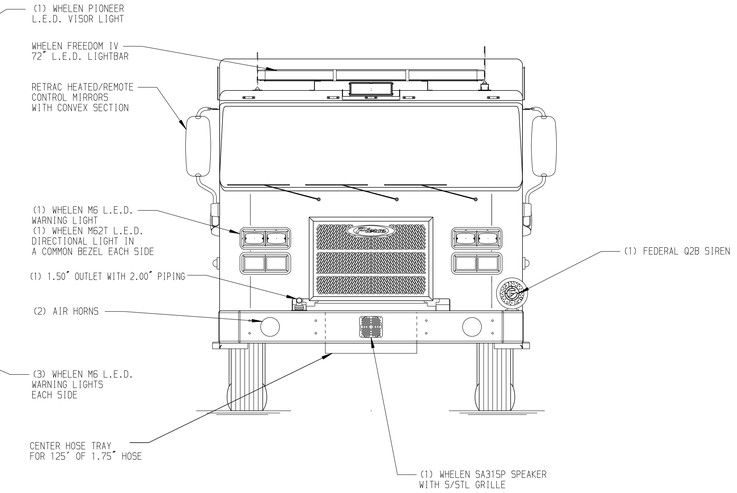

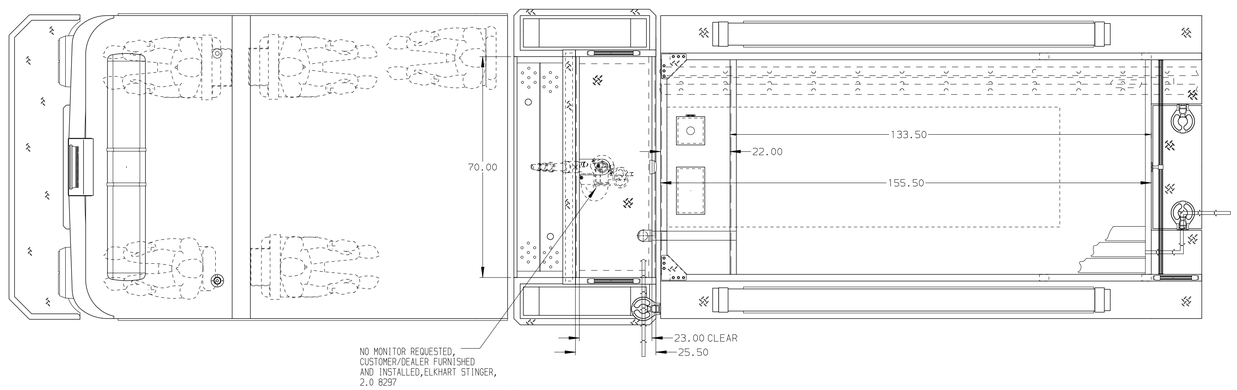

HOSEBED CAPACITY

BED 1
200' OF 2.50" D.J. POLY HOSE

BED 2
600' OF 4.00" D.J. POLY HOSE

BED 3
600' OF 4.00" D.J. POLY HOSE

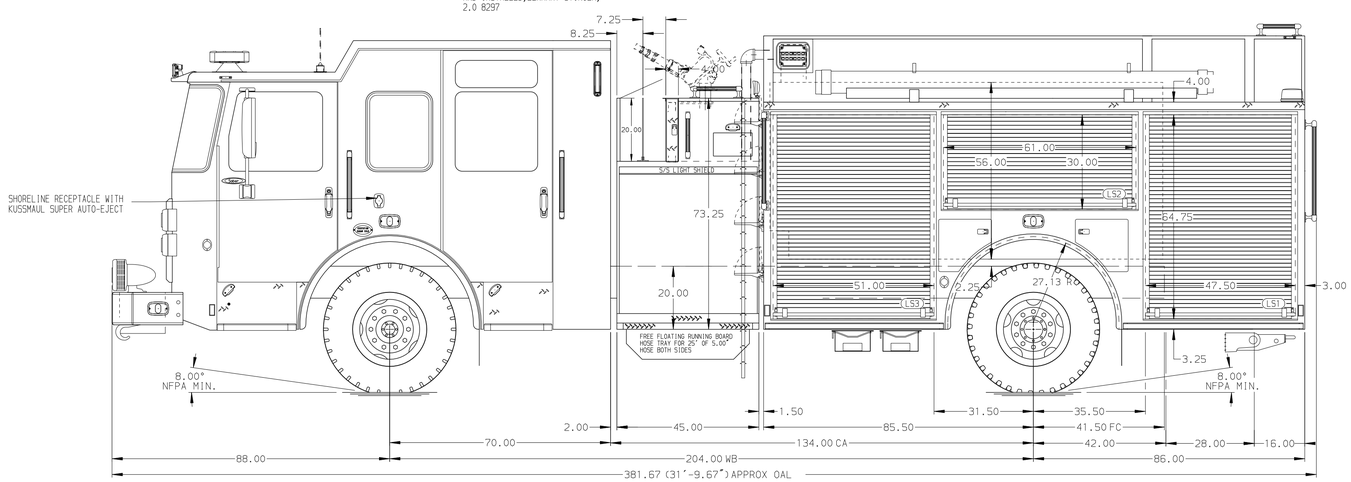

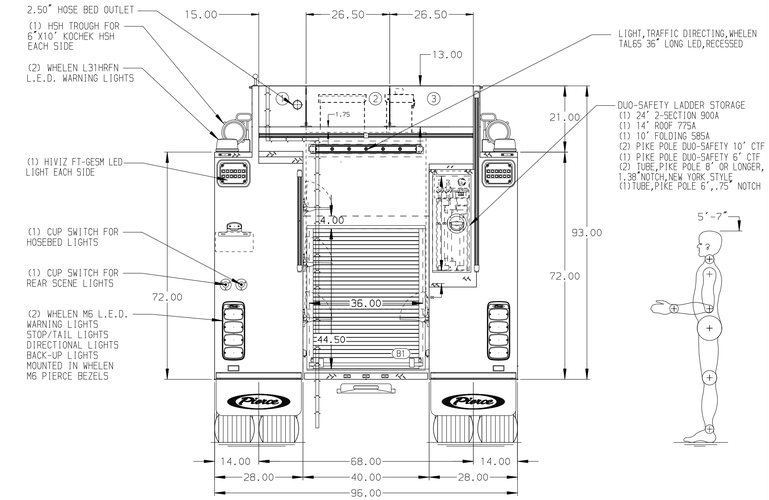

NOTE
DIMENSIONS SHOWN ARE APPROXIMATE AND ARE SUBJECT TO MINOR DEVIATIONS AS MAY OCCUR OR BE NECESSARY IN CONSTRUCTION.
MINOR DETAILS NOT SHOWN.

REV	DATE	BY	CH
5	24SEP24	KLE	CCS
4	17JUL24	RHU	CCS

CHASSIS DATA
MAKE: PIERCE
MODEL: SABER FR

Pierce MANUFACTURING INC.

TITLE: Pierce Pumper Approval Drawing
FOR: Okeechobee County
DWG NO.: 40948AD

JOB NO.	40948
SCALE	1:24
DATE	
DRAWN BY	VHO
30APR24	
CHECKED BY	MMF
01MAY24	
SHEET SIZE	D
SHEET NO.	1 OF 1

View File Created 25-SEP-2024 11:50:24