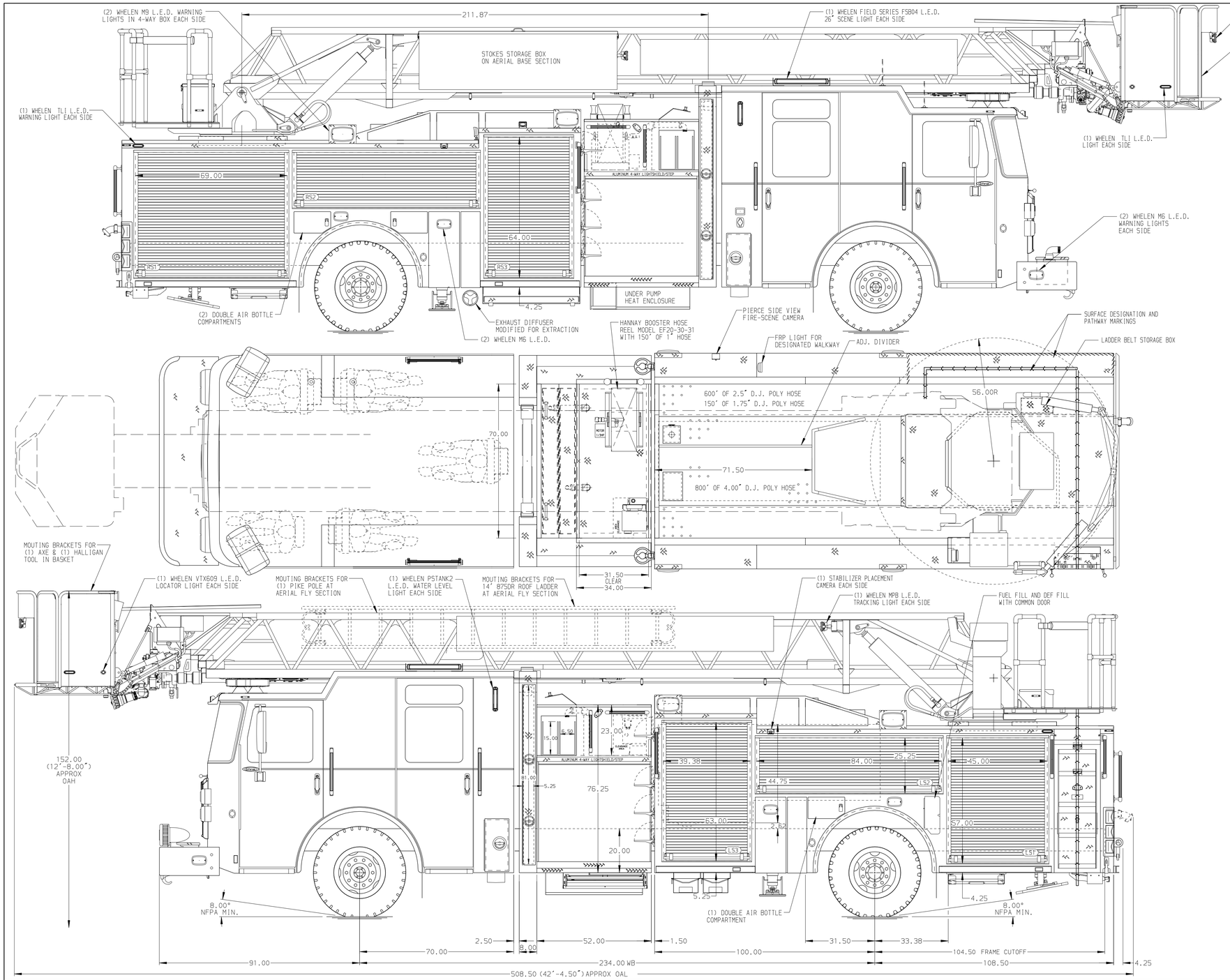

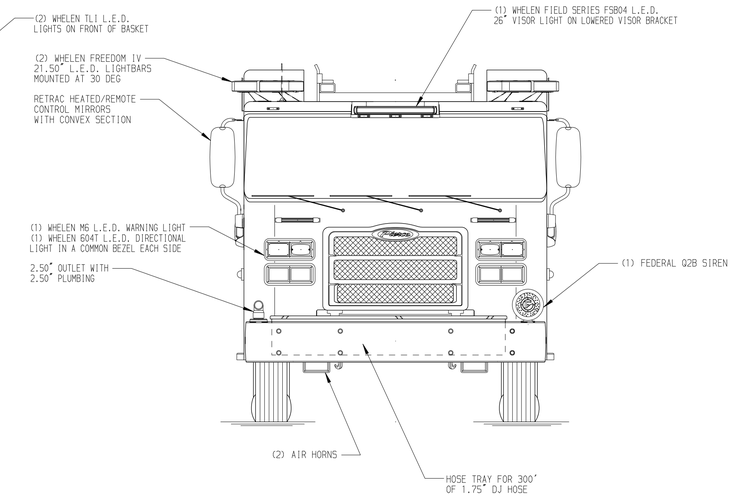

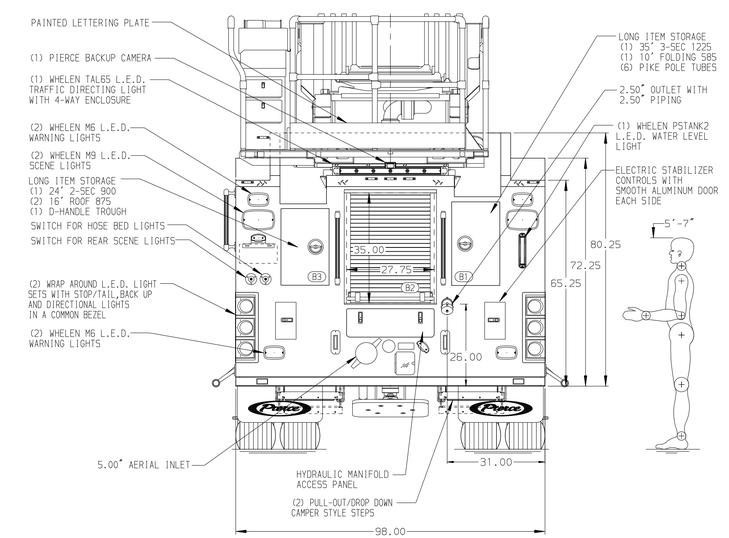

BODY	TOTAL TANK CAPACITY
110' Single Axle Platform Aluminum Body	500 Gallon Poly Tank
COMPT,LEFT SIDE FRONT	WATER CAPACITY
Full Height Rollup Forward	470 Gallons of Water
COMPT,LEFT SIDE REAR	FOAM CELL CAPACITY
Full Height Rollup Rearward	30 Gallon Foam Cell
COMPT,RIGHT SIDE FRONT	FOAM SYSTEM
Full Height Rollup Forward	Husky 3 Single Agent Foam System
COMPT,RIGHT SIDE REAR	
Full Height Large Compt Rollup Rearward	

CHASSIS	CAB	ELECTRICAL SYSTEM	AXLE,FRONT,CUSTOM	PUMPHOUSE	CROSSLAYS,1.50"	SPEEDLAYS
Enforcer Chassis	7010 Notched Enforcer Cab	Hard Wired	23,000 Lb Dana Axle	52" Control Zone Side Mount	(2) 1.50", Poly Trays, 200' of 1.75"	Speedlays Not Required
ENGINE	BUMPER	TRANSMISSION	AXLE,REAR	PUMP	CROSSLAYS,2.50"	
450 HP Cummins L9 Engine	22" Extended Underslung, 12" High	Allison 6th Gen, 3000 EVS P	33,500 Lb Meritor Axle	2000 GPM Waterous CSU	2.50" Crosslay Not Required	

NOTE

DIMENSIONS SHOWN ARE APPROXIMATE AND ARE SUBJECT TO MINOR DEVIATIONS AS MAY OCCUR OR BE NECESSARY IN CONSTRUCTION.
MINOR DETAILS NOT SHOWN.

1. ONE 1.50 OUTLET WITH 2.00 PIPING AND SWIVEL LOCATED IN CENTER BUMPER TRAY
2. SHORELINE RECEPTACLE WITH KUSSMAUL SUPER AUTO-EJECT LOCATED BEHIND PASSENGER SIDE CREW CAB DOOR
3. AIR INLET WITH DISCONNECT COUPLING IN THE DRIVER SIDE STEPWELL
4. BATTERY CHARGER LOCATED PER ORDER
5. BATTERY CHARGE INDICATOR LOCATED BEHIND PASSENGER SIDE CREW CAB DOOR
6. EIGHT ADJUSTABLE SHELVES LOCATED IN COMPARTMENTS PER ORDER
7. TWO FLOOR MOUNTED SLIDE-OUT TRAYS LOCATED IN COMPARTMENTS PER ORDER
8. FIVE RECEPTACLES LOCATED PER ORDER
9. 1250 GPM HIGH FLOW WATERWAY
10. ONE TILT/SLIDE-OUT TRAY LOCATED IN COMPARTMENT PER ORDER
11. ONE SWING-OUT TOOLBOARD LOCATED IN COMPARTMENT PER ORDER
12. TWO VERTICAL PARTITIONS LOCATED IN COMPARTMENTS PER ORDER
13. ONE CTECH FOUR-DRAWER CABINET LOCATED IN COMPARTMENT PER ORDER
14. ONE CIRCUIT BREAKER PANEL LOCATED IN COMPARTMENT PER ORDER
15. ONE SLIDE-OUT OIL DRY HOPPER LOCATED IN COMPARTMENT PER ORDER
16. TWO RECEPTACLE STRIPS LOCATED PER ORDER
17. TWO WHELEN MPB L.E.D. LIGHTS UNDER BASKET
18. TECNIQ 4-SECTION RUNG LIGHTING AT AERIAL DEVICE

REV	DATE	BY	CH
1	09JUN25	ANZ	TDC
2	27MAY25	ANZ	TDC
1	14APR25	ANZ	TDC

CHASSIS DATA
MAKE: PIERCE
MODEL: ENFORCER

Pierce MANUFACTURING INC.

TITLE: 110' ASCENDANT AERIAL LADDER AND BODY ASSEMBLY
FOR: EAGLE RIVER, EAGLE RIVER, WI
DWG NO.: 40962AD

JOB NO.	40962
SCALE	1:24
DATE	
DRAWN BY	ANZ 13FEB25
CHECKED BY	JLO 21FEB25
SHEET SIZE	D
SHEET NO.	1 OF 1

View File Created 10-JUN-2025 09:27:40