PUMPER

BODY
Long Aluminum 2nd Gen Pumper

CHASSIS
Enforcer Chassis

ELECTRICAL SYSTEM
Hard Wired

CHASSIS

AXLE, FRONT, CUSTOM
19,500 Lb TAK-4 Axle

AXLE, REAR
27,000 Lb Dana Axle

ENGINE
510 HP Paccar MX13 Engine

TRANSMISSION
ALlison 6th Gen, 4000 EVS P

BUMPER
19" Extended Stainless Steel

CAB
7010 Enforcer Cab

BODY

TOTAL TANK CAPACITY
1000 Gallon New York Style Poly Tank

WATER CAPACITY
1000 Gallons of Water

FOAM CELL CAPACITY
Foam Cell Not Required

COMPT, PUMPER, REAR
30.75" FF Double Door Rear Compt

COMPT, PUMPER, LEFT SIDE
161" Lap Full Height FDLER

COMPT, PUMPER, RIGHT SIDE
161" Lap Low FDLER

FIRE SUPPRESSION

PUMPHOUSE
42" Control Zone Top Mount

PUMP
1500 GPM Darley PSM Single Stage

CROSSLAYS, 1.50"
1.50" Crosslays Not Required

CROSSLAYS, 2.50"
2.50" Crosslay Not Required

SPEEDLAYS
(2) 1.50" W/Tray Std. Capacity

GENERATOR
Generator Not Required

FOAM SYSTEM
Foam System Not Required

SAFETY

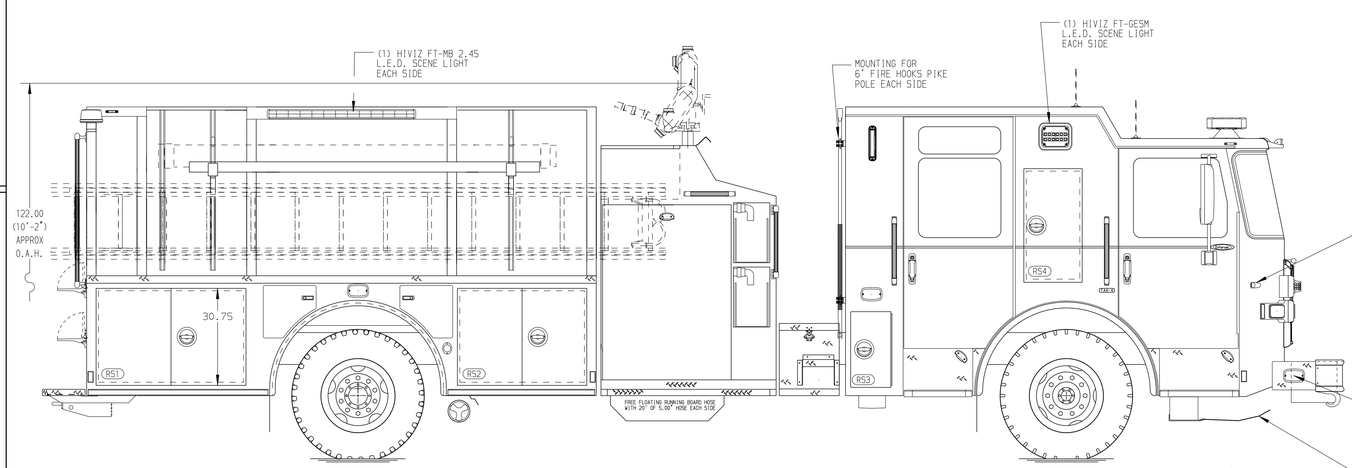

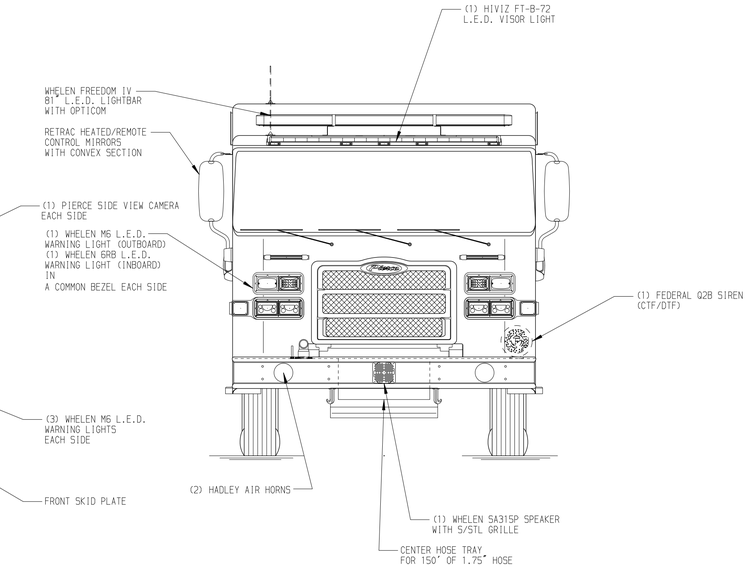

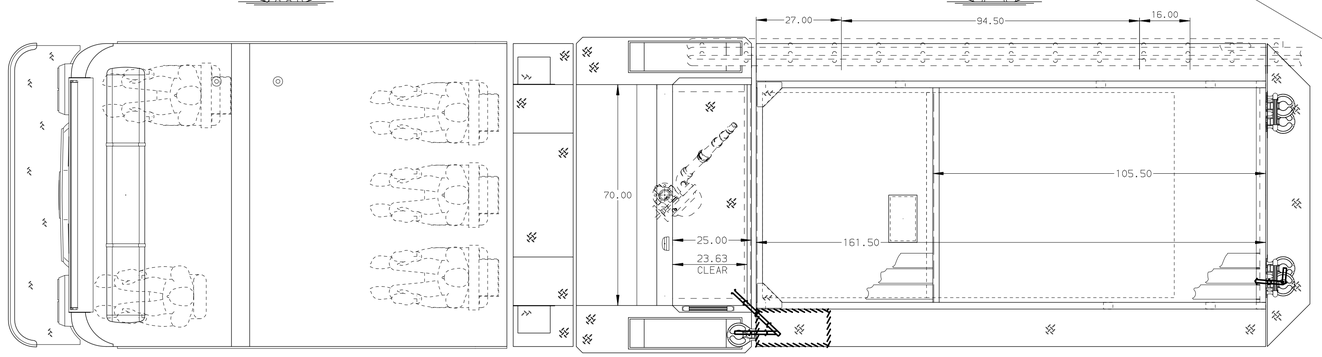

HOSEBED CAPACITIES
1. 1000' OF 5.00" D.J. POLY HOSE
2. 800' OF 3.00" D.J. POLY HOSE
3. 200' OF 2.50" D.J. POLY HOSE
4. 400' OF 2.50" D.J. POLY HOSE
5. 400' OF 1.75" D.J. POLY HOSE

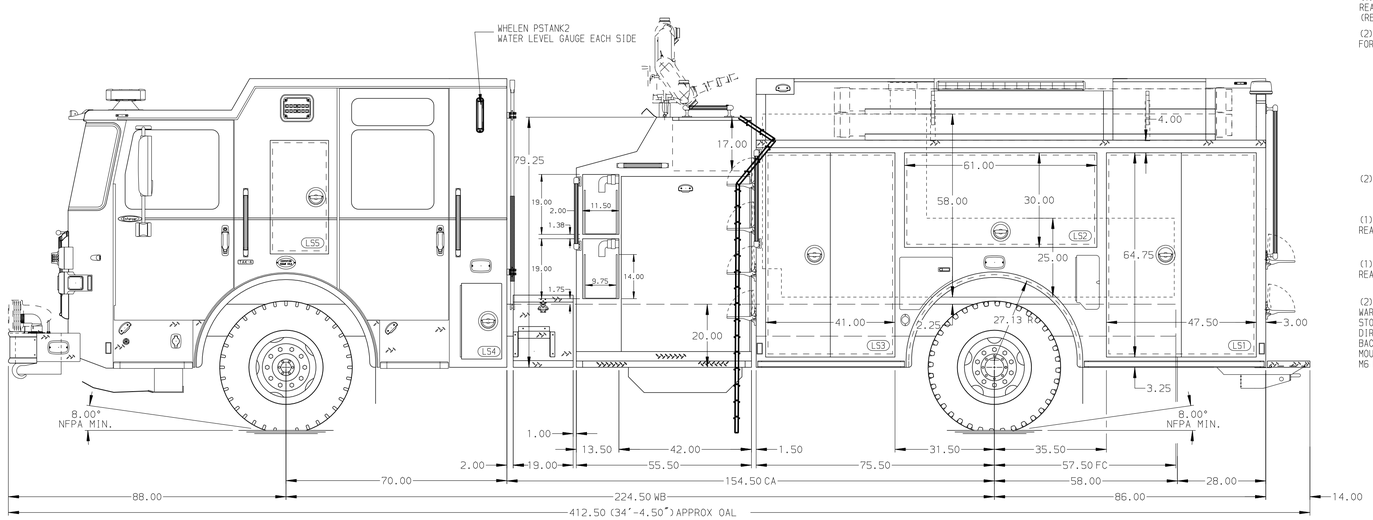

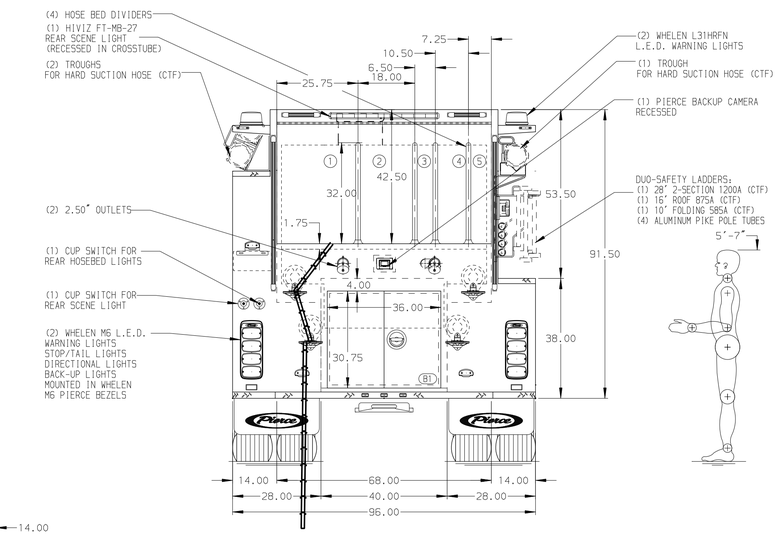

NOTE
DIMENSIONS SHOWN ARE APPROXIMATE AND ARE SUBJECT TO MINOR DEVIATIONS AS MAY OCCUR OR BE NECESSARY IN CONSTRUCTION.
MINOR DETAILS NOT SHOWN.

1. ONE 2.50 OUTLET WITH 2.50 PIPING AND SWIVEL WITH TRAVEL STOP LOCATED ON TOP OF THE RIGHT SIDE OF THE BUMPER
2. SHORELINE RECEPTACLE WITH KUSSMAUL SUPER AUTO-EJECT LOCATED ON DRIVER SIDE STEPWELL
3. AIR INLET WITH KUSSMAUL AIR EJECT ON DRIVER'S SIDE STEPWELL
4. BATTERY CHARGER LOCATED PER ORDER
5. BATTERY CHARGE INDICATOR LOCATED ON DRIVER SEAT RISER
6. FIVE ADJUSTABLE SHELVES LOCATED PER ORDER
7. ONE FLOOR MOUNTED SLIDE-OUT TRAY LOCATED PER ORDER
8. WHEEL CHOCKS AND BRACKETS (CTF)
9. ONE SWING OUT TOOLBOARD LOCATED PER ORDER
10. PARTITION BETWEEN LS1/B1 AND RS1/B1

REV	DATE	BY	CH
V	10FEB26	LST	JKR
V	15DEC25	LST	JKR
V	29SEP25	LST	JKR
V	28AUG25	LST	JKR

CHASSIS DATA
MAKE: PIERCE
MODEL: ENFORCER

Pierce MANUFACTURING INC.

TITLE: Pierce Pumper Approval Drawing
FOR: Springfield Rural Fire Protection District
DWG NO.: 41001AD

JOB NO.	41001
SCALE	1:24
DATE	
DRAWN BY	LST
DATE	12MAY25
CHECKED BY	MMF
DATE	13MAY25
SHEET SIZE	D
SHEET NO.	1 OF 1

View File Created 10-FEB-2026 10:24:30