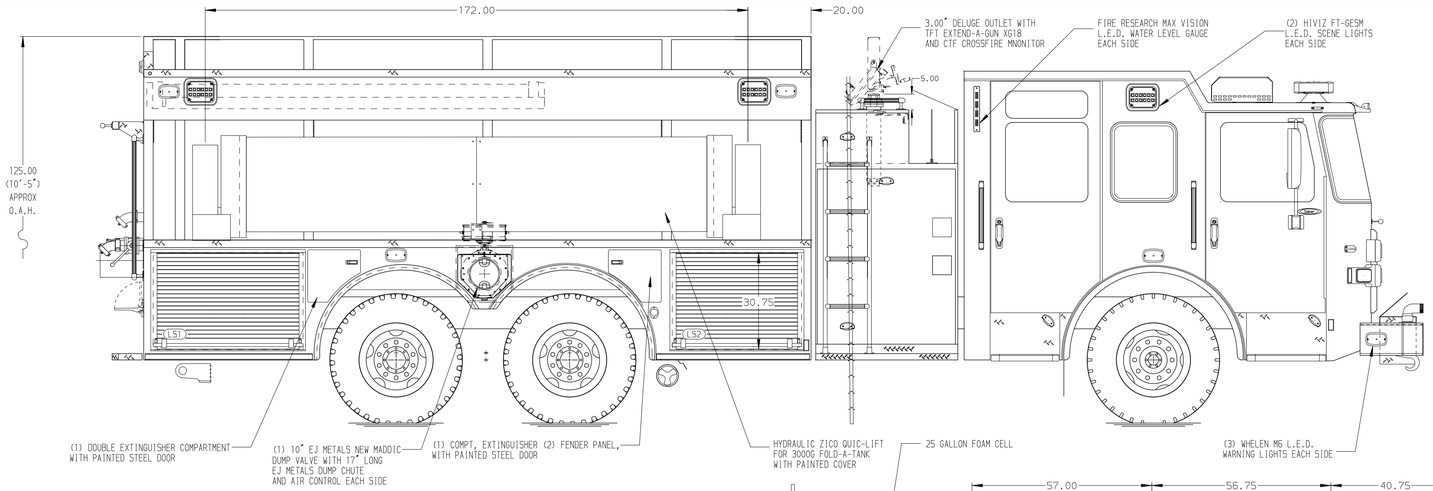

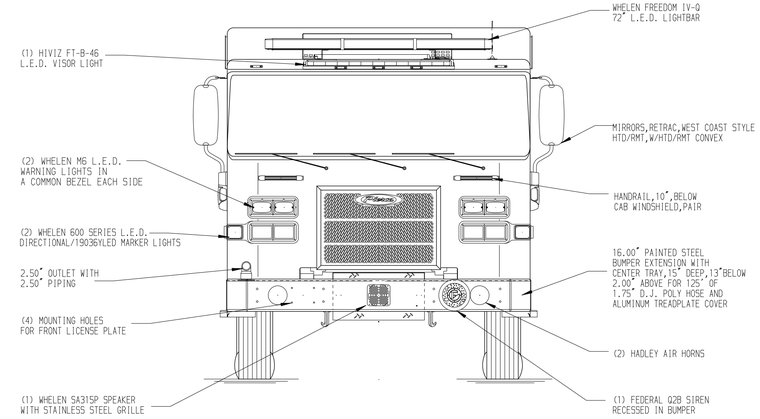

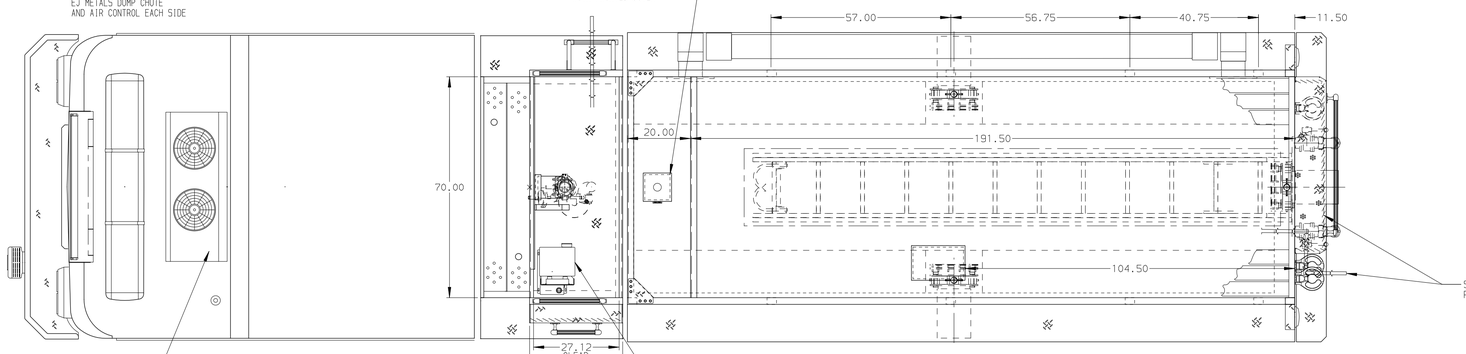

HOSEBED CAPACITIES

1 - 1000' OF 4.00" D.J. POLY HOSE
2 - 300' OF 3.00" D.J. POLY HOSE
3 - 300' OF 1.75 DOUBLE STACK" D.J. POLY HOSE

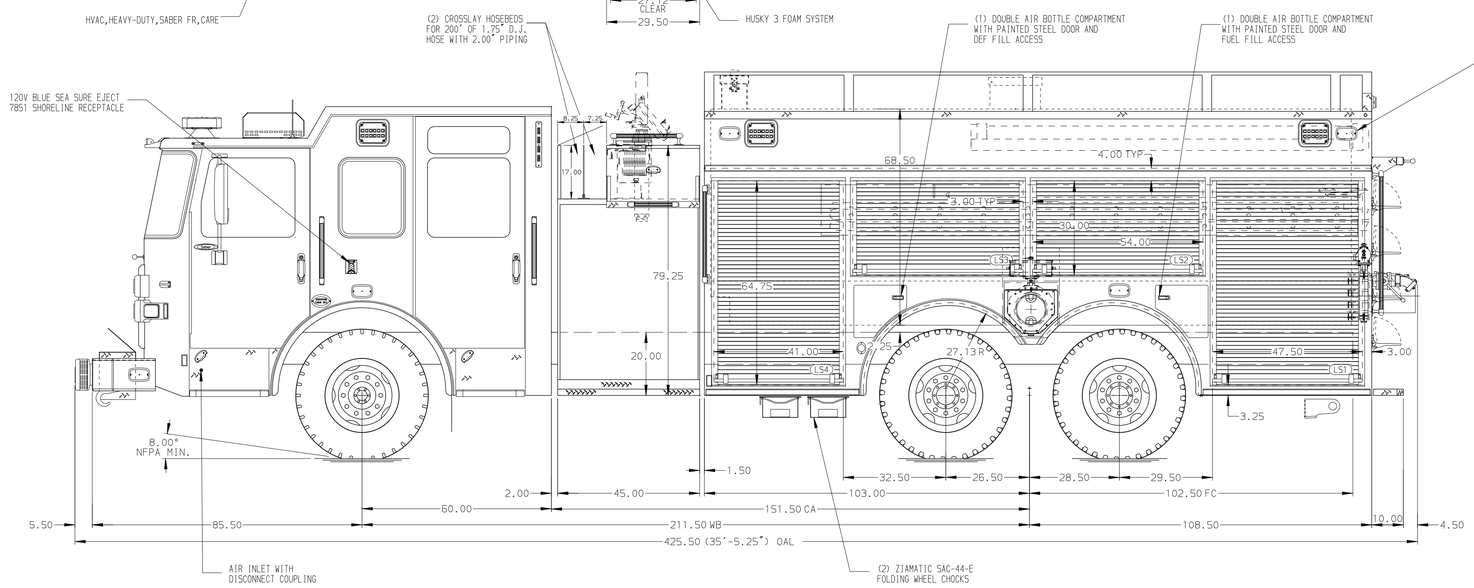

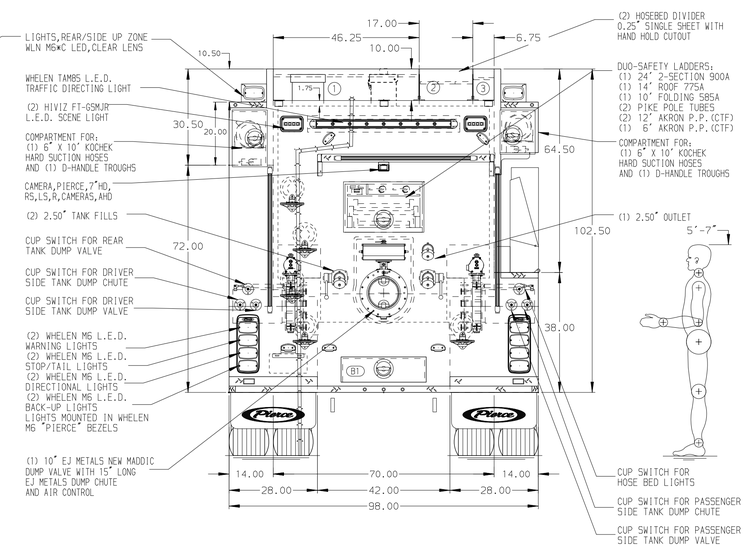

ALUMINUM BODY

MAXIMUM O.A.L. 425.50"

NOTE

DIMENSIONS SHOWN ARE APPROXIMATE AND ARE SUBJECT TO MINOR DEVIATIONS AS MAY OCCUR OR BE NECESSARY IN CONSTRUCTION.
MINOR DETAILS NOT SHOWN.

REV	DATE	BY	CH
V	29APR25	ADP	CCS
B	12MAR25	RHU	CCS
V	30JAN25	JJB	WKL

CHASSIS DATA — MAKE: PIERCE — MODEL: SABER FR

Pierce MANUFACTURING INC.

TITLE: 1500 GPM, 3025G TANK, 3000G WATER, 25G FOAM 211" 2G DRY SIDE TANKER, HARD WIRED

FOR: MINEOLA FIRE DEPARTMENT, MINEOLA, TEXAS

DWG NO.: 41005AD

JOB NO.	41005
SCALE 1:24	DATE
DRAWN BY JJB	14JAN25
CHECKED BY WKL	14JAN25
SHEET SIZE D	SHEET NO. 1 OF 1

View File Created 30-APR-2025 08:41:43